LAMINATED TRANSFORMERS　　EI型变压器(TDB-A系列)

Low Frequency, Single-phase
North American Safety Standards

特性 General Specification:

- 功率 Power—40VA to 300VA
- 绝缘强度 Dielectric Strength—2500VRMS Hipot
- 初级 Primary—120V-60Hz
- 次级 Secondary—常用次级电压 Many popular secondary voltage
- 绝缘 Insulation—Class B（130℃）
- 引出 Lead-out—引线或焊片 9.84"(250mm) wire or soldering terminal.

符合标准Agency Standards

- UL, compliant to UL 1411, File # E248268
- CUL, compliant to CSA 22.2 #1-94.

型　号 Part No.	功率 VA（Size）	Voltage Sec.(V)	Current Sec.(A)
TDB-A040-2006	40	2x6	2x3.33
TDB-A050-2006	50	2x6	2x4.17
TDB-A080-2006	80	2x6	2x6.67
TDB-A040-2010	40	2x10	2x2.0
TDB-A050-2010	50	2x10	2x2.5
TDB-A080-2010	80	2x10	2x4.0
TDB-A120-2010	120	2x10	2x6.0
TDB-A040-1011	40	11.5	3.48
TDB-A050-1011	50	11.5	4.35
TDB-A080-1011	80	11.5	6.96
TDB-A100-1011	100	11.5	8.70
TDB-A040-2012	40	2x12	2x1.67
TDB-A050-2012	50	2x12	2x2.08
TDB-A080-2012	80	2x12	2x3.33
TDB-A120-2012	120	2x12	2x5.00
TDB-A160-2012	160	2x12	2x6.67
TDB-A040-2015	40	2X15	2x1.33
TDB-A050-2015	50	2x15	2x1.67
TDB-A080-2015	80	2x15	2x2.67
TDB-A120-2015	120	2x15	2x4.00
TDB-A160-2015	160	2x15	2x5.33
TDB-A200-2015	200	2x15	2x6.67
TDB-A040-2018	40	2X18	2x1.11
TDB-A050-2018	50	2x18	2x1.39
TDB-A080-2018	80	2x18	2x2.22
TDB-A120-2018	120	2x18	2x3.33
TDB-A160-2018	160	2x18	2x4.44
TDB-A200-2018	200	2x18	2x5.55
TDB-A250-2018	250	2x18	2x6.94
TDB-A300-2018	300	2x18	2x8.33
TDB-A040-2022	40	2x22	2x0.91
TDB-A050-2022	50	2x22	2x1.14
TDB-A080-2022	80	2x22	2x1.82
TDB-A120-2022	120	2x22	2x2.73
TDB-A160-2022	160	2x22	2x3.64
TDB-A200-2022	200	2x22	2x4.55
TDB-A250-2022	250	2x22	2x5.68
TDB-A300-2022	300	2x22	2x6.82
TDB-A040-2024	40	2X24	2x0.83
TDB-A050-2024	50	2x24	2x1.04
TDB-A080-2024	80	2x24	2x1.67
TDB-A120-2024	120	2x24	2x2.50
TDB-A160-2024	160	2x24	2x3.33
TDB-A200-2024	200	2x24	2x4.17
TDB-A250-2024	250	2x24	2x5.21
TDB-A300-2024	300	2x24	2x6.25

机械结构 Mechanical

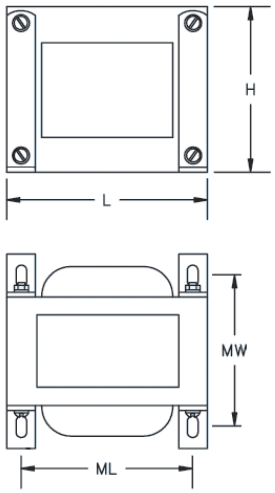

原理图 Schematics

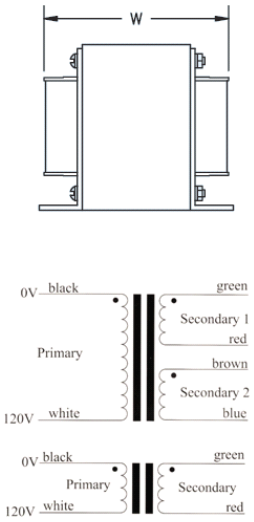

参考尺寸 Dimensions (mm)

型　号 Part No.	功率 Power (VA)	长 L	宽 W	高 H	ML	MW	安装螺栓 Mtg. Screw	重量 Weight(Kg)
TDB-A040	40	66.0	46.0	56.0	55.0	44.5	Φ4	**0.57**
TDB-A050	50	66.0	52.0	56.0	55.0	48.5	Φ4	**0.82**
TDB-A080	80	76.2	54.0	64.5	63.5	49.5	Φ5	**1.10**
TDB-A100	100	76.2	62.0	64.5	63.5	55.5	Φ5	**1.35**
TDB-A120	120	85.8	62.0	72.5	71.5	53.5	Φ5	**1.55**
TDB-A160	160	96.0	74.0	81.0	71.5	63.5	Φ5	**2.14**
TDB-A200	200	96.0	72.0	81.0	80.0	61.0	Φ5	**2.35**
TDB-A250	250	105.0	76.0	88.5	87.5	62.0	Φ5	**2.81**
TDB-A300	300	105.0	86.0	88.5	87.5	72.0	Φ5	**3.61**

中策亿特电子有限公司 ZHONGCE E.T ELECTRONICS CO., LTD.
TEL: 0086-574-88156789, FAX: 0086-574-88156799, www.zcet.cn

LAMINATED TRANSFORMERS　　EI型变压器(TDB-A系列)

Low Frequency, Single-phase Power Transformers for Automatic Gate

RoHS 2002/95/EC

特性 General Specification:

- 功率 Power—50VA
- 待机损耗 Power Stand by—P1<6W
- 绝缘强度 Dielectric Strength—3500VRMS Hipot
- 初级 Primary—230V, 260V, 120V, 110V 50/60Hz
- 次级 Secondary—24V
- 端子 Terminals—6.3mm*0.8mm quick-connect
- 绝缘 Insulation—Class B （130℃）
- 阻燃等级 Flammability Rating—UL94-V2

符合标准Agency Standards

- UL, compliant to UL506/UL5085-2 File # E304315
- CUL, compliant to CSA 22.2 #66.2
- VDE 0570 File # 40014237

机械结构 Mechanical

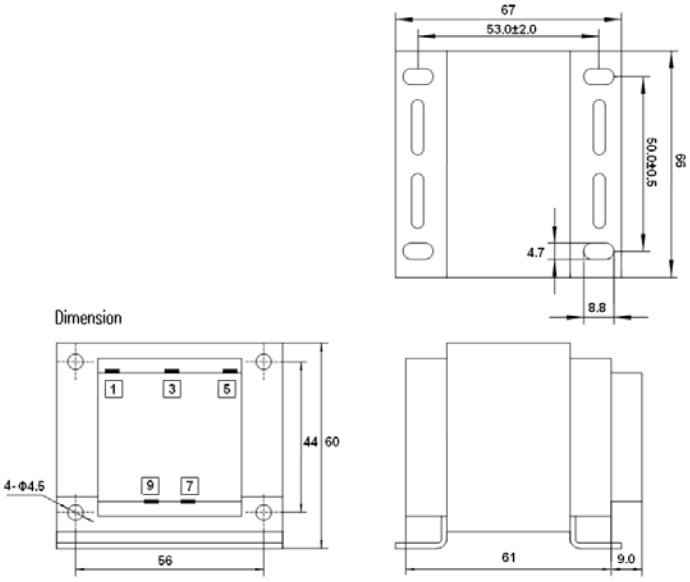

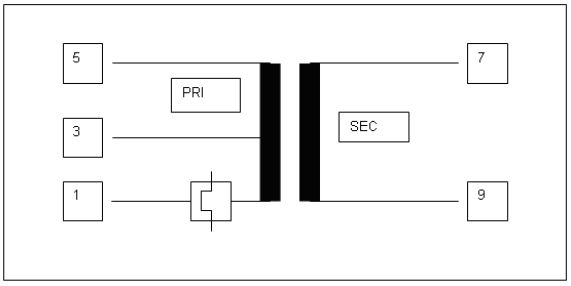

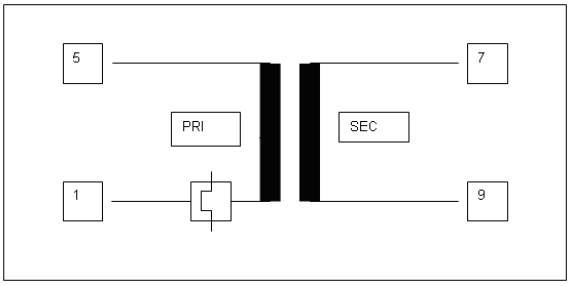

Electrical performance Parameter Table/电性能参数表

型　号 Part No.	输入电压 Primary	输入端 PRI. Pin No.	输出空载电压 No-load Volts	输出工作电流 Operation Mode	输出待机电流 Stand by	安装脚 Foot Mount	安装尺寸 Mounting
TDB-A-1	230V	Pin1-3	24.0V	>18.0V@7.0A	-	NO	44x56
		Pin1-5	18.5V	-	>18V@0.1A		
		Pin1-3	24.0V	>18.0V@7.0A	-	YES	50x53
		Pin1-5	18.5V	-	>18V@0.1A		
TDB-A-2	260V	Pin1-3	24.0V	>18.0V@7.0A	-	NO	44x56
		Pin1-5	18.5V	-	>18V@0.1A		
		Pin1-3	24.0V	>18.0V@7.0A	-	YES	50x53
		Pin1-5	18.5V	-	>18V@0.1A		
TDB-A-3	120V	Pin1-5	24.0V	>18.0V@7.0A	-	NO	44x56
						YES	50x53
TDB-A-4	110V	Pin1-5	24.0V	>18.0V@7.0A	-	NO	44x56
						YES	50x53

中策亿特电子有限公司 ZHONGCE E.T ELECTRONICS CO., LTD.
TEL: 0086-574-88156789, FAX: 0086-574-88156799, www.zcet.cn

LAMINATED TRANSFORMERS　　EI型变压器(TDB-A系列)

Low Frequency, Single-phase Power Transformers for Automatic Gate

RoHS 2002/95/EC

特性 General Specification:

- 功率 Power—75VA
- 待机损耗 Power Stand by—P1<3W
- 绝缘强度 Dielectric Strength—3500VRMS Hipot
- 初级 Primary—230V, 260V, 120V, 110V 50/60Hz
- 次级 Secondary—24V
- 端子 Terminals—6.3mm*0.8mm quick-connect
- 绝缘 Insulation—Class B （130℃）
- 阻燃等级 Flammability Rating—UL94-V2

符合标准Agency Standards

- UL, compliant to UL506/UL5085-2 File # E304315
- CUL, compliant to CSA 22.2 #66.2

机械结构 Mechanical

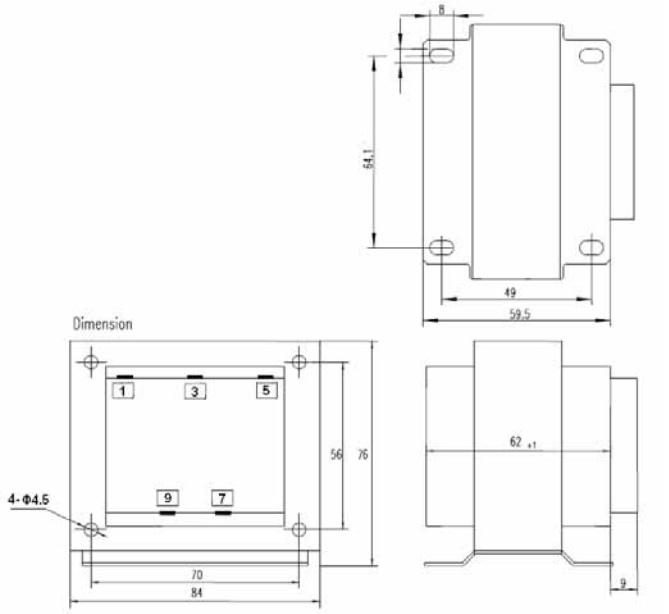

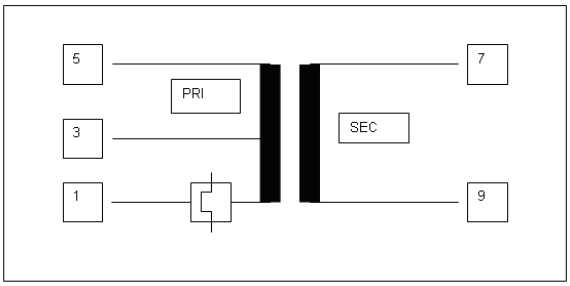

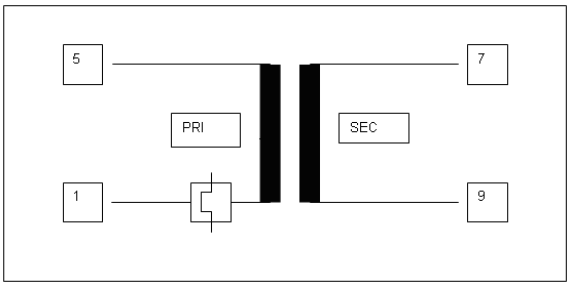

Electrical performance Parameter Table/电性能参数表

型　号 Part No.	输入电压 Primary	输入端 PRI. Pin No.	输出空载电压 No-load Volts	输出工作电流 Operation Mode	输出待机电流 Stand by	安装脚 Foot Mount	安装尺寸 Mounting
TDB-A-230B101	230V	Pin1-3	24.0V	>18.0V@10.0A	-	NO	56x70
		Pin1-5	18.5V	-	>18V@0.1A		
		Pin1-3	24.0V	>18.0V@10.0A	-	YES	49x64
		Pin1-5	18.5V	-	>18V@0.1A		
TDB-A-260B101	260V	Pin1-3	24.0V	>18.0V@10.0A	-	NO	56x70
		Pin1-5	18.5V	-	>18V@0.1A		
		Pin1-3	24.0V	>18.0V@10.0A	-	YES	49x64
		Pin1-5	18.5V	-	>18V@0.1A		
TDB-A-120B10	120V	Pin1-5	24.0V	>18.0V@10.0A	-	NO	56x70
						YES	49x64
TDB-A-110B10	110V	Pin1-5	24.0V	>18.0V@10.0A	-	NO	56x70
						YES	49x64

中策亿特电子有限公司 ZHONGCE E.T ELECTRONICS CO., LTD.
TEL: 0086-574-88156789, FAX: 0086-574-88156799, www.zcet.cn

LAMINATED TRANSFORMERS　　EI型变压器(TDB-A系列)

Low Frequency, Single-phase Power Transformers for Automatic Gate

RoHS 2002/95/EC

特性 General Specification:

- 功率 Power—96VA
- 待机损耗 Power Stand by—P1<3W
- 绝缘强度 Dielectric Strength—3500VRMS Hipot
- 初级 Primary—230V, 260V, 120V, 110V 50/60Hz
- 次级 Secondary—24V
- 端子 Terminals—6.3mm*0.8mm quick-connect
- 绝缘 Insulation—Class B （130℃）
- 阻燃等级 Flammability Rating—UL94-V2

符合标准Agency Standards

- UL, compliant to UL506/UL5085-2 File # E304315
- CUL, compliant to CSA 22.2 #66.2

机械结构 Mechanical

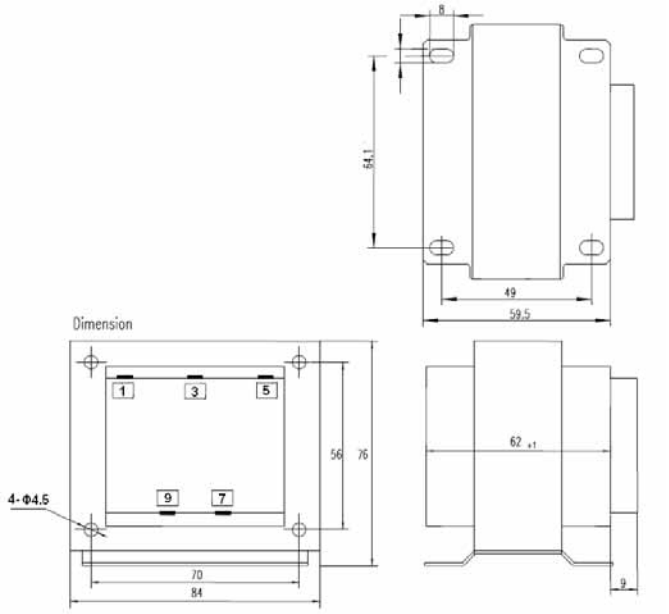

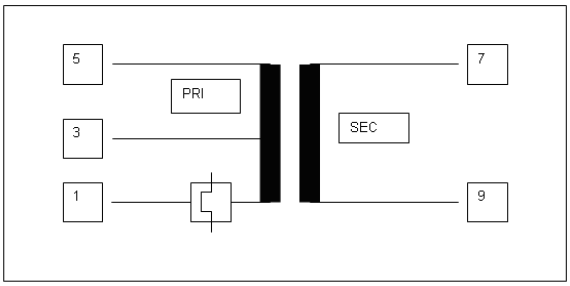

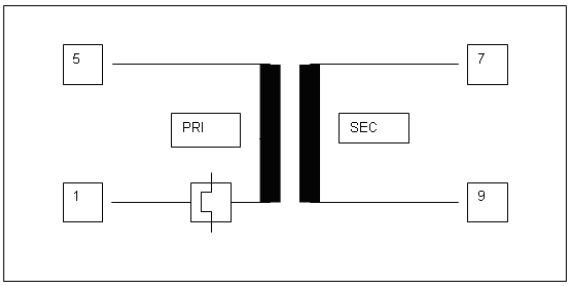

Electrical performance Parameter Table/电性能参数表

型　号 Part No.	输入电压 Primary	输入端 PRI. Pin No.	输出空载电压 No-load Volts	输出工作电流 Operation Mode	输出待机电流 Stand by	安装脚 Foot Mount	安装尺寸 Mounting
TDB-A-230B141	230V	Pin1-3	24.0V	>18.0V@14.0A	-	NO	56x70
		Pin1-5	18.5V	-	>18V@0.1A		
		Pin1-3	24.0V	>18.0V@14.0A	-	YES	49x64
		Pin1-5	18.5V	-	>18V@0.1A		
TDB-A-260B141	260V	Pin1-3	24.0V	>18.0V@14.0A	-	NO	56x70
		Pin1-5	18.5V	-	>18V@0.1A		
		Pin1-3	24.0V	>18.0V@14.0A	-	YES	49x64
		Pin1-5	18.5V	-	>18V@0.1A		
TDB-A-120B14	120V	Pin1-5	24.0V	>18.0V@14.0A	-	NO	56x70
						YES	49x64
TDB-A-110B14	110V	Pin1-5	24.0V	>18.0V@14.0A	-	NO	56x70
						YES	49x64

LAMINATED TRANSFORMERS　　EI型变压器(TDB-A系列)

Low Frequency, Single-phase Power Transformers for Automatic Gate

RoHS 2002/95/EC

特性 General Specification:

- 功率 Power—90VA
- 待机损耗 Power Stand by—P1<3W
- 绝缘强度 Dielectric Strength—3500VRMS Hipot
- 初级 Primary—120V/230V 50/60Hz
- 次级 Secondary—24V
- 端子 Terminals—6.3mm*0.8mm quick-connect
- 绝缘 Insulation—Class B （130℃）
- 阻燃等级 Flammability Rating—UL94-V2

符合标准Agency Standards

- UL, compliant to UL506/UL5085-2 File # E304315
- CUL, compliant to CSA 22.2 #66.2

机械结构 Mechanical

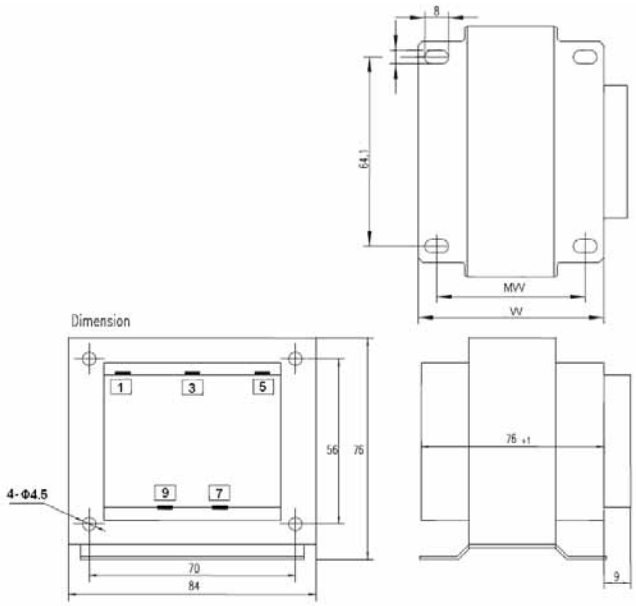

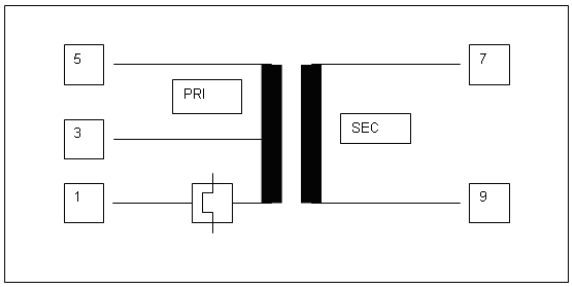

型　号 Part No.	MOUNTING WIDTH(MW)	WIDTH(W)	FOOT MOUNT
TDB-A-1230B7	49mm	59.5mm	YES
TDB-A1230B10	53mm	73.5mm	YES

Electrical performance Parameter Table/电性能参数表

型　号 Part No.	输入电压 Primary	输入端 PRI. Pin No.	输出空载电压 No-load Volts	输出工作电流 Operation Mode	安装脚 Foot Mount	安装尺寸 Mounting
TDB-A-1230B7	120V	Pin1-3	24.0V	>18.0V@7.0A	NO	56x70
	230V	Pin1-5				
	120V	Pin1-3	24.0V	>18.0V@7.0A	YES	49x64
	230V	Pin1-5				
TDB-A-1230B10	120V	Pin1-3	24.0V	>18.0V@10.0A	NO	56x70
	230V	Pin1-5				
	120V	Pin1-3	24.0V	>18.0V@10.0A	YES	53x64
	230V	Pin1-5				

中策亿特电子有限公司 ZHONGCE E.T ELECTRONICS CO., LTD.
TEL: 0086-574-88156789, FAX: 0086-574-88156799, www.zcet.cn

LAMINATED TRANSFORMERS　　EI型变压器(TDB-B系列)

Low Frequency, Single-phase
North American Safety Standards

特性 General Specification:

- 功率 Power—20VA to 100VA
- 绝缘强度 Dielectric Strength—2500VRMS Hipot
- 初级 Primary—120V-60Hz
- 次级 Secondary—常用次级电压 Many popular secondary voltage
- 绝缘 Insulation—Class B（130℃）
- 引出 Lead-out—引线或焊片 9.84”(250mm) wire or soldering terminal.

符合标准Agency Standards

- UL, compliant to UL 1411, File # E248268
- CUL, compliant to CSA 22.2 #1-94.

型　号 Part No.	功率 VA （Size）	Voltage Sec.(V)	Current Sec.(A)
TDB-B020-2006	20	2x6	2x1.67
TDB-B030-2006	30	2x6	2x2.50
TDB-B040-2006	40	2x6	2x3.33
TDB-B050-2006	50	2x6	2x4.17
TDB-B080-2006	80	2x6	2x6.67
TDB-B020-2010	20	2x10	2x1.0
TDB-B030-2010	30	2x10	2x1.5
TDB-B040-2010	40	2x10	2x2.0
TDB-B050-2010	50	2x10	2x2.5
TDB-B080-2010	80	2x10	2x4.0
TDB-B020-1011	20	11.5	1.74
TDB-B030-1011	30	11.5	2.61
TDB-B040-1011	40	11.5	3.48
TDB-B050-1011	50	11.5	4.35
TDB-B080-1011	80	11.5	6.96
TDB-B100-1011	100	11.5	8.70
TDB-B020-2012	20	2x12	2x0.83
TDB-B030-2012	30	2x12	2x1.25
TDB-B040-2012	40	2x12	2x1.67
TDB-B050-2012	50	2x12	2x2.08
TDB-B080-2012	80	2x12	2x3.33
TDB-B100-2012	100	2x12	2x4.17
TDB-B020-2015	20	2x15	2x0.67
TDB-B030-2015	30	2x15	2x1.00
TDB-B040-2015	40	2x15	2x1.33
TDB-B050-2015	50	2x15	2x1.67
TDB-B080-2015	80	2x15	2x2.67
TDB-B100-2015	100	2x15	2x3.33
TDB-B020-2018	20	2x18	2x0.56
TDB-B030-2018	30	2x18	2x0.83
TDB-B040-2018	40	2X18	2x1.11
TDB-B050-2018	50	2x18	2x1.39
TDB-B080-2018	80	2x18	2x2.22
TDB-B100-2018	100	2x18	2x2.78
TDB-B020-2022	20	2x22	2x0.45
TDB-B030-2022	30	2x22	2x0.68
TDB-B040-2022	40	2x22	2x0.91
TDB-B050-2022	50	2x22	2x1.14
TDB-B080-2022	80	2x22	2x1.82
TDB-B100-2022	100	2x22	2x2.27
TDB-B020-2024	20	2X24	2x0.42
TDB-B030-2024	30	2x24	2x0.63
TDB-B040-2024	40	2X24	2x0.83
TDB-B050-2024	50	2x24	2x1.04
TDB-B080-2024	80	2x24	2x1.67
TDB-B100-2024	100	2x24	2x2.08

机械结构 Mechanical

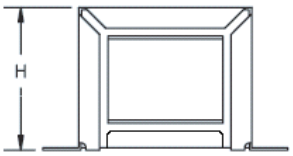

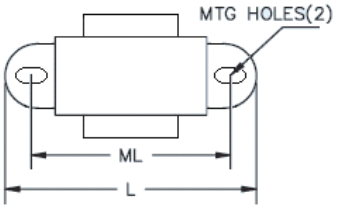

原理图 Schematics

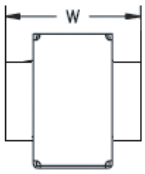

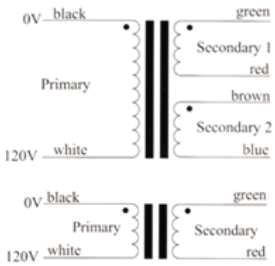

参考尺寸 Dimensions (mm)

型　号 Part No.	功率 Power (VA)	长 L	宽 W	高 H	ML	安装螺栓 Mtg. Screw	重量 Weight (Kg)
TDB-B020	20	59.5	45.0	51.0	71.0	Φ4	0.55
TDB-B030	30	59.5	50.0	51.0	71.0	Φ4	0.60
TDB-B040	40	59.5	55.0	51.0	71.0	Φ4	0.72
TDB-B050	50	68.5	52.0	58.0	80.0	Φ4	0.84
TDB-B080	80	78.5	54.0	58.0	90.0	Φ4	1.25
TDB-B100	100	78.5	62.0	66.0	90.0	Φ4	1.50

中策亿特电子有限公司 ZHONGCE E.T ELECTRONICS CO., LTD.
TEL: 0086-574-88156789, FAX: 0086-574-88156799, www.zcet.cn

LAMINATED TRANSFORMERS　　EI型叠片式变压器(TDB-D系列)

Low Frequency, Open-Style Laminated, International PC Plug-In Series

RoHS 2002/95/EC

特性 General Specification:

- 功率 Power—1.2 VA to 3.0VA
- 绝缘强度 Dielectric Strength—2500VRMS Hipot
- 初级 Primary—单组输入 Single primary (120V-50/60Hz)
- 次级 Secondary—串联或并联式 Series or parallel secondaries
- 端子 Terminals—印刷电路板安装 Printed circuit mount
- 绝缘 Insulation—Class A（105℃）

符合标准Agency Standards:

- UL, compliant to UL 1411, File # E248268
- CUL, compliant to CSA 22.2 #1-94.

机械结构 Mechanical

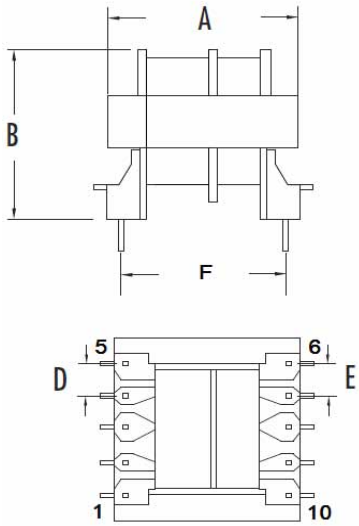

原理图 Schematics

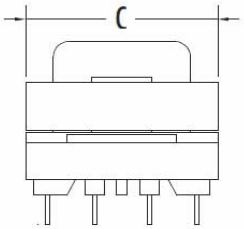

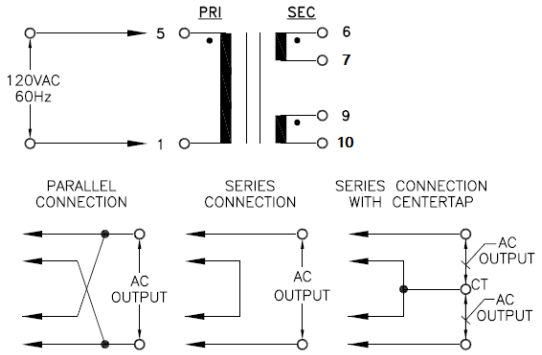

型　号 Part No.	功率 VA（Size）	次级额定值 Secondary RMS	
		串联 Series	并联 Parallel
TDB-D28-1204	1.2	4VCT@300mA	2V@600mA
TDB-D28-1604	1.6	4VCT@400mA	2V@800mA
TDB-D35-2004	2.0	4VCT@500mA	2V@1000mA
TDB-D35-3004	3.0	4VCT@750mA	2V@1500mA
TDB-D28-1206	1.2	6VCT@200mA	3V@400mA
TDB-D28-1606	1.6	6VCT@265mA	3V@530mA
TDB-D35-2006	2.0	6VCT@335mA	3V@670mA
TDB-D35-3006	3.0	6VCT@500mA	3V@1000mA
TDB-D28-1210	1.2	10VCT@120mA	5V@240mA
TDB-D28-1610	1.6	10VCT@160mA	5V@320mA
TDB-D35-2010	2.0	10VCT@200mA	5V@400mA
TDB-D35-3010	3.0	10VCT@300mA	5V@600mA
TDB-D28-1214	1.2	14VCT@85mA	7V@170mA
TDB-D28-1614	1.6	14VCT@115mA	7V@230mA
TDB-D35-2014	2.0	14VCT@145mA	7V@290mA
TDB-D35-3014	3.0	14VCT@215mA	7V@430mA
TDB-D28-1216	1.2	16VCT@75mA	8V@150mA
TDB-D28-1616	1.6	16VCT@100mA	8V@200mA
TDB-D35-2016	2.0	16VCT@125mA	8V@250mA
TDB-D35-3016	3.0	16VCT@190mA	8V@380mA
TDB-D28-1218	1.2	18VCT@65mA	9V@130mA
TDB-D28-1618	1.6	18VCT@90mA	9V@180mA
TDB-D35-2018	2.0	18VCT@110mA	9V@220mA
TDB-D35-3018	3.0	18VCT@165mA	9V@330mA
TDB-D28-1222	1.2	22VCT@55mA	11V@110mA
TDB-D28-1622	1.6	22VCT@75mA	11V@150mA
TDB-D35-2022	2.0	22VCT@90mA	11V@180mA
TDB-D35-3022	3.0	22VCT@135mA	11V@270mA
TDB-D28-1224	1.2	24VCT@50mA	12V@100mA
TDB-D28-1624	1.6	24VCT@65mA	12V@130mA
TDB-D35-2024	2.0	24VCT@85mA	12V@170mA
TDB-D35-3024	3.0	24VCT@125mA	12V@250mA
TDB-D28-1226	1.2	26VCT@45mA	13V@90mA
TDB-D28-1626	1.6	26VCT@60mA	13V@120mA
TDB-D35-2026	2.0	26VCT@75mA	13V@150mA
TDB-D35-3026	3.0	26VCT@115mA	13V@230mA

参考尺寸 Dimensions (mm)

型　号 Part No.	VA (Size)	A	B	C	D	E	F
TDB-D28-12XX	**1.2**	**25.5**	**29.0**	**28.5**	**4.9**	**4.9**	**20.0**
TDB-D28-16XX	**1.6**	**25.5**	**33.0**	**28.5**	**4.9**	**4.9**	**20.0**
TDB-D35-20XX	**2.0**	**30.5**	**32.0**	**35.5**	**5.5**	**5.5**	**21.0**
TDB-D35-30XX	**3.0**	**30.5**	**36.0**	**35.5**	**5.5**	**5.5**	**21.7**

中策亿特电子有限公司 ZHONGCE E.T ELECTRONICS CO., LTD.
TEL: 0086-574-88156789, FAX: 0086-574-88156799, www.zcet.cn

LAMINATED TRANSFORMERS　　EI型叠片式变压器(TDB-D系列)

Low Frequency, Open-Style Laminated, International PC Plug-In Series

RoHS 2002/95/EC

特性 General Specification:

- 功率 Power—1.2 VA to 3.0VA
- 绝缘强度 Dielectric Strength—2500VRMS Hipot
- 初级 Primary—单组输入 Single primary (120V-50/60Hz)
- 次级 Secondary—串联或并联式 Series or parallel secondaries
- 端子 Terminals—印刷电路板安装 Printed circuit mount
- 绝缘 Insulation—Class A（105℃）

符合标准Agency Standards:

- UL, compliant to UL 1411, File # E248268
- CUL, compliant to CSA 22.2 #1-94.

型　号 Part No.	功率 VA（Size）	次级额定值 Secondary RMS	
		串联 Series	并联 Parallel
TDB-D41-0508	5.0	8VCT@0.625A	4V@1.25A
TDB-D41-0808	8.0	8VCT@1.00A	4V@2.00A
TDB-D48-1008	10.0	8VCT@1.25A	4V@2.50A
TDB-D48-1208	12.0	8VCT@1.50A	4V@3.00A
TDB-D41-0510	5.0	10VCT@0.50A	5V@1.00A
TDB-D41-0810	8.0	10VCT@0.80A	5V@1.60A
TDB-D48-1010	10.0	10VCT@1.00A	5V@2.00A
TDB-D48-1210	12.0	10VCT@1.20A	5V@2.40A
TDB-D41-0512	5.0	12VCT@0.42A	6V@0.84A
TDB-D41-0812	8.0	12VCT@0.65A	6V@1.30A
TDB-D48-1012	10.0	12VCT@0.85A	6V@1.70A
TDB-D48-1212	12.0	12VCT@1.00A	6V@2.00A
TDB-D41-0514	5.0	14VCT@0.36A	7V@0.72A
TDB-D41-0814	8.0	14VCT@0.57A	7V@1.14A
TDB-D48-1014	10.0	14VCT@0.71A	7V@1.42A
TDB-D48-1214	12.0	14VCT@0.86A	7V@1.72A
TDB-D41-0516	5.0	16VCT@0.31A	8V@0.62A
TDB-D41-0816	8.0	16VCT@0.50A	8V@1.00A
TDB-D41-1016	10.0	16VCT@0.625A	8V@1.25A
TDB-D41-1216	12.0	16VCT@0.75A	8V@1.50A
TDB-D41-0518	5.0	18VCT@0.28A	9V@0.56A
TDB-D41-0818	8.0	18VCT@0.45A	9V@0.90A
TDB-D48-1018	10.0	18VCT@0.55A	9V@1.10A
TDB-D48-1218	12.0	18VCT@0.67A	9V@1.34A
TDB-D41-0522	5.0	22VCT@0.23A	11V@0.46A
TDB-D41-0822	8.0	22VCT@0.36A	11V@0.72A
TDB-D48-1022	10.0	22VCT@0.45A	11V@0.90A
TDB-D48-1222	12.0	22VCT@0.55A	11V@1.10A
TDB-D41-0524	5.0	24VCT@0.21A	12V@0.42A
TDB-D41-0824	8.0	24VCT@0.33A	12V@0.66A
TDB-D48-1024	10.0	24VCT@0.42A	12V@0.84A
TDB-D48-1224	12.0	24VCT@0.50A	12V@1.00A
TDB-D41-0526	5.0	26VCT@0.19A	13V@0.38A
TDB-D41-0826	8.0	26VCT@0.31A	13V@0.62A
TDB-D48-1026	10.0	26VCT@0.38A	13V@0.76A
TDB-D48-1226	12.0	26VCT@0.46A	13V@0.92A

机械结构 Mechanical

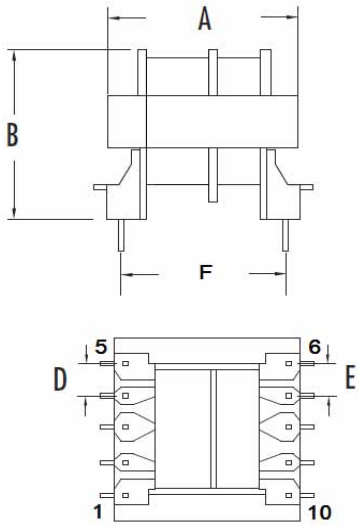

原理图 Schematics

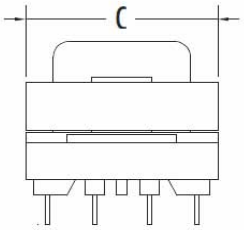

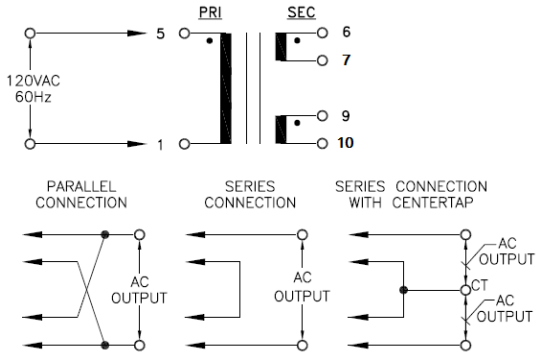

尺寸 Dimensions (mm)

型　号 Part No.	VA (Size)	A	B	C	D	E	F
TDB-D41-05XX	5	34.0	31.0	41.5	5.0	5.0	27.1
TDB-D41-08XX	8	34.0	35.0	41.5	5.0	5.0	27.1
TDB-D48-10XX	10	40.5	36.0	48.5	7.5	7.5	29.5
TDB-D48-12XX	12	40.5	40.0	48.5	7.5	7.5	29.5

中策亿特电子有限公司 ZHONGCE E.T ELECTRONICS CO., LTD.
TEL: 0086-574-88156789, FAX: 0086-574-88156799, www.zcet.cn

LAMINATED TRANSFORMERS　　EI型叠片式变压器(IP系列)

Low Frequency, Open-Style Laminated, International Power Series

RoHS 2002/95/EC

特性 General Specification:

- 功率 Power—25VA to175VA
- 绝缘强度 Dielectric Strength—4000VRMS Hipot
- 初级 Primary—双组输入 Dual primaries(115/230V-50/60Hz)
- 次级 Secondary—串联或并联式 Series or parallel secondaries
- 端子 Terminals—焊接或快速连接器 Solder lug or quick-connect
- 绝缘 Insulation—Class B（130℃）

符合标准Agency Standards:

- UL, compliant to UL 506 / UL5085-2.
- CSA, compliant to CSA 22.2 #66.2

机械结构 Mechanical

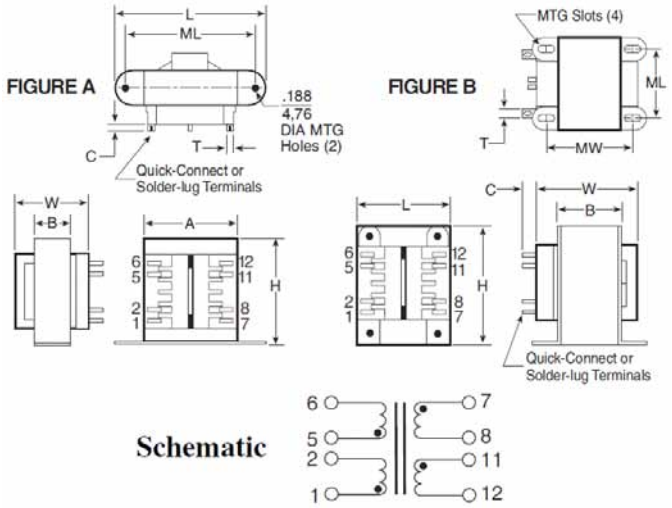

型　号 Part No.	功率 VA（Size）	次级额定值 Secondary RMS	
		串联 Series	并联 Parallel
ETE-IP-10-25	25	10VCT@2.5A	5V@5.0A
ETE-IP-10-43	43	10VCT@4.3A	5V@8.6A
ETE-IP-10-80	80	10VCT@8.0A	5V@16.0A
ETE-IP-10-130	130	10VCT@13.0A	5V@26.0A
ETE-IP-10-175	175	10VCT@17.5A	5V@35.0A
ETE-IP-12-25	25	12.6VCT@2.0A	6.3V@4.0A
ETE-IP-12-43	43	12.6VCT@3.4A	6.3V@6.8A
ETE-IP-12-80	80	12.6VCT@6.3A	6.3V@12.6A
ETE-IP-12-130	130	12.6VCT@10.3A	6.3V@20.6A
ETE-IP-12-175	175	12.6VCT@14.0A	6.3V@28.0A
ETE-IP-16-25	25	16VCT@1.6A	8V@3.2A
ETE-IP-16-43	43	16VCT@2.7A	8V@5.4A
ETE-IP-16-80	80	16VCT@5.0A	8V@10.0A
ETE-IP-16-130	130	16VCT@8.1A	8V@16.2A
ETE-IP-16-175	175	16VCT@11.0A	8V@22.0A
ETE-IP-20-25	25	20VCT@1.25A	10V@2.5A
ETE-IP-20-43	43	20VCT@2.2A	10V@4.4A
ETE-IP-20-80	80	20VCT@4.0A	10V@8.0A
ETE-IP-20-130	130	20VCT@6.5A	10V@13.0A
ETE-IP-20-175	175	20VCT@8.8A	10V@17.6A
ETE-IP-24-25	25	24VCT@1.0A	12V@2.0A
ETE-IP-24-43	43	24VCT@1.8A	12V@3.6A
ETE-IP-24-80	80	24VCT@3.3A	12V@6.6
ETE-IP-24-130	130	24VCT@5.4A	12V@10.8A
ETE-IP-24-175	175	24VCT@7.3A	12V@14.6A
ETE-IP-28-25	25	28VCT@0.9A	14V@1.86A
ETE-IP-28-43	43	28VCT@1.5A	14V@3.0A
ETE-IP-28-80	80	28VCT@2.8A	14V@5.6A
ETE-IP-28-130	130	28VCT@4.6A	14V@9.2A
ETE-IP-28-175	175	28VCT@6.25A	14V@12.5A
ETE-IP-36-25	25	36VCT@0.7A	18V@1.4A
ETE-IP-36-43	43	36VCT@1.2A	18V@2.4A
ETE-IP-36-80	80	36VCT@2.2A	18V@4.4A
ETE-IP-36-130	130	36VCT@3.6A	18V@7.2A
ETE-IP-36-175	175	36VCT@4.8A	18V@9.6A
ETE-IP-230-25	25	230VCT@0.11A	115V@0.22A
ETE-IP-230-43	43	230VCT@0.19A	115V@0.38A
ETE-IP-230-80	80	230VCT@0.35A	115V@0.70A
ETE-IP-230-130	130	230VCT@0.57A	115V@1.14A
ETE-IP-230-175	175	230VCT@0.76A	115V@1.52A

参考尺寸 Dimensions (mm)

VA (Size)	Wt. (kg.)	L	W	H	A	B	C	T	ML	MW	MTG.	FIG.
25	0.57	71.50	47.50	58.70	50.80	28.50	8.0	T187	60.00	--	Φ4	A
43	0.73	79.50	52.50	68.10	57.15	28.50	8.0	T187	71.50	--	Φ4	A
80	1.27	63.50	60.50	76.20	--	35.00	8.0	T187	50.80	55.50	Φ5	B
130	1.86	71.50	73.00	85.80	--	41.50	10.0	T250	57.20	63.50	Φ5	B
175	2.50	80.00	73.00	96.00	--	41.50	10.0	T250	64.00	63.50	Φ5	B

LAMINATED TRANSFORMERS　　EI型叠片式变压器(CT系列)

Low Frequency, Open-Style Laminated, Chassis-Tran Series (Single 115V)

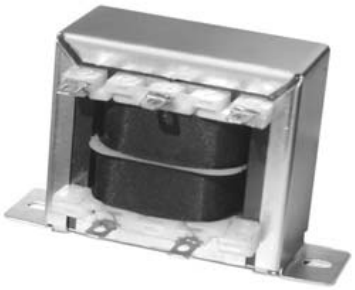

特性 General Specification:

- 功率 Power—2.4VA to100VA
- 绝缘强度 Dielectric Strength—2500VRMS Hipot
- 初级 Primary—单组输入 Single primary (115V-50/60Hz)
- 次级 Secondary—中心抽头 Center tapped secondaries
- 端子 Terminals—焊接或快速连接器 Solder lug or quick-connect
- 绝缘 Insulation—Class B（130℃）

符合标准Agency Standards:

- UL, compliant to UL 506 / UL5085-2.
- CSA, compliant to CSA 22.2 #66.2

机械结构 Mechanical　　原理图 Schematics

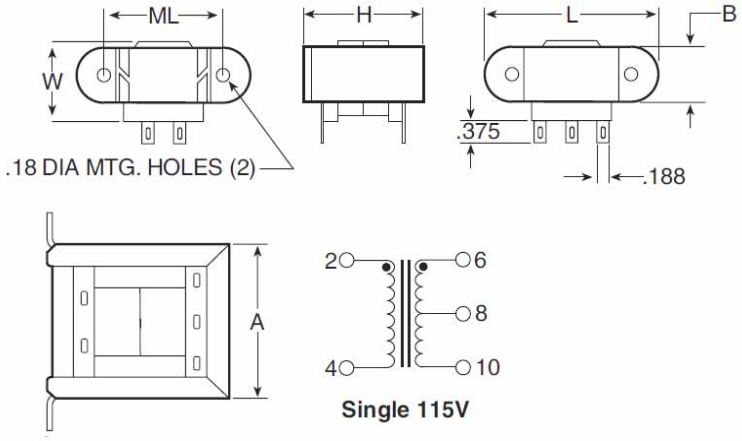

参考尺寸 Dimensions (mm)

VA (Size)	Wt. (kg.)	L	W	H	A	B	ML
6	0.20	60.5	32.0	35.0	43.0	17.5	51.0
12	0.32	71.5	35.0	41.5	50.0	20.5	60.5
30	0.50	82.5	43.0	49.0	59.0	27.0	71.5
56	0.78	93.5	46.0	57.5	68.0	27.0	79.5
100	1.25	102.5	57.5	65.0	78.0	33.5	90.0

型号 Part No. (Single 115V)	功率 VA （Size）	次级额定值 Secondary RMS Rating
ETE-CT-10-6S	6	10VCT@0.6A
ETE-CT-10-12S	12	10VCT@1.2A
ETE-CT-10-30S	30	10VCT@3.0A
ETE-CT-10-56S	56	10VCT@5.0A
ETE-CT-10-100S	100	10VCT@10.0A
ETE-CT-12-6S	6	12.6VCT@0.5A
ETE-CT-12-12S	12	12.6VCT@1.0A
ETE-CT-12-30S	30	12.6VCT@2.5A
ETE-CT-12-56S	56	12.6VCT@4.0A
ETE-CT-12-100S	100	12.6VCT@8.0A
ETE-CT-16-6S	6	16VCT@0.40A
ETE-CT-16-12S	12	16VCT@0.80A
ETE-CT-16-30S	30	16VCT@2.0A
ETE-CT-16-56S	56	16VCT@3.5A
ETE-CT-16-100S	100	16VCT@6.25A
ETE-CT-20-6S	6	20VCT@0.3A
ETE-CT-20-12S	12	20VCT@0.6A
ETE-CT-20-30S	30	20VCT@1.5A
ETE-CT-20-56S	56	20VCT@2.8A
ETE-CT-20-100S	100	20VCT@5.0A
ETE-CT-24-6S	6	24VCT@0.25A
ETE-CT-24-12S	12	24VCT@0.5A
ETE-CT-24-30S	30	24VCT@1.25A
ETE-CT-24-56S	56	24VCT@2.4A
ETE-CT-24-100S	100	24VCT@4.0A
ETE-CT-28-6S	6	28VCT@0.2A
ETE-CT-28-12S	12	28VCT@0.42A
ETE-CT-28-30S	30	28VCT@1.1A
ETE-CT-28-56S	56	28VCT@2.0A
ETE-CT-28-100S	100	28VCT@3.6A
ETE-CT-36-6S	6	36VCT@0.17A
ETE-CT-36-12S	12	36VCT@0.35A
ETE-CT-36-30S	30	36VCT@0.85A
ETE-CT-36-56S	56	36VCT@1.5A
ETE-CT-36-100S	100	36VCT@2.8A
ETE-CT-48-6S	6	48VCT@0.125A
ETE-CT-48-12S	12	48VCT@0.25A
ETE-CT-48-30S	30	48VCT@0.63A
ETE-CT-48-56S	56	48VCT@1.2A
ETE-CT-48-100S	100	48VCT@2.0A
ETE-CT-56-6S	6	56VCT@0.11A
ETE-CT-56-12S	12	56VCT@0.22A
ETE-CT-56-30S	30	56VCT@0.54A
ETE-CT-56-56S	56	56VCT@1.0A
ETE-CT-56-100S	100	56VCT@1.8A
ETE-CT-120-6S	6	120VCT@0.05A
ETE-CT-120-12S	12	120VCT@0.1A
ETE-CT-120-30S	30	120VCT@0.25A
ETE-CT-120-56S	56	120VCT@0.5A
ETE-CT-120-100S	100	120VCT@0.85A

LAMINATED TRANSFORMERS　　EI型叠片式变压器(CT系列)

Low Frequency, Open-Style Laminated, Chassis-Tran Series (Dual 115/230V)

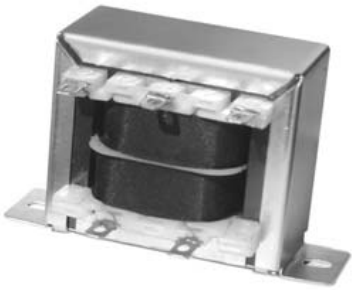

特性 General Specification:

- 功率 Power—6VA to100VA
- 绝缘强度 Dielectric Strength—2500VRMS Hipot
- 初级 Primary—双组输入 Dual primaries(115/230V-50/60Hz)
- 次级 Secondary—中心抽头 Center tapped secondaries
- 端子 Terminals—焊接或快速连接器 Solder lug or quick-connect
- 绝缘 Insulation—Class B（130℃）

符合标准Agency Standards:

- UL, compliant to UL 506 / UL5085-2.
- CSA, compliant to CSA 22.2 #66.2

机械结构 Mechanical　　原理图 Schematics

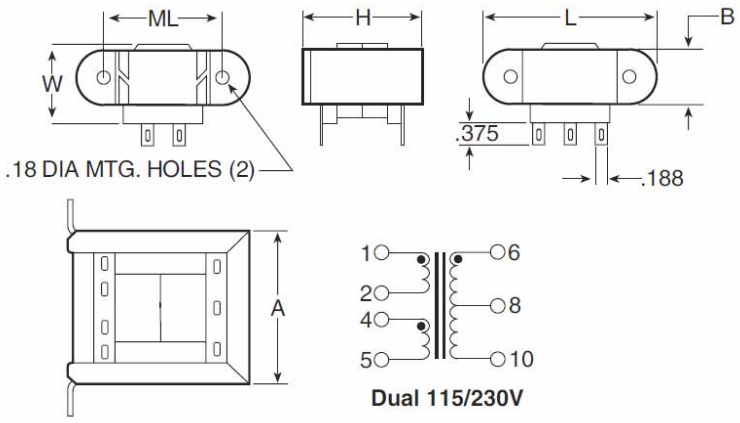

参考尺寸 Dimensions (mm)

VA (Size)	Wt. (kg.)	L	W	H	A	B	ML
6	0.20	60.5	32.0	35.0	43.0	17.5	51.0
12	0.32	71.5	35.0	41.5	50.0	20.5	60.5
30	0.50	82.5	43.0	49.0	59.0	27.0	71.5
56	0.78	93.5	46.0	57.5	68.0	27.0	79.5
100	1.25	102.5	57.5	65.0	78.0	33.5	90.0

型号 Part No. (Dual115/230V)	功率 VA （Size）	次级额定值 Secondary RMS Rating
ETE-CT-10-6	6	10VCT@0.6A
ETE-CT-10-12	12	10VCT@1.2A
ETE-CT-10-30	30	10VCT@3.0A
ETE-CT-10-56	56	10VCT@5.0A
ETE-CT-10-100	100	10VCT@10.0A
ETE-CT-12-6	6	12.6VCT@0.5A
ETE-CT-12-12	12	12.6VCT@1.0A
ETE-CT-12-30	30	12.6VCT@2.5A
ETE-CT-12-56	56	12.6VCT@4.0A
ETE-CT-12-100	100	12.6VCT@8.0A
ETE-CT-16-6	6	16VCT@0.40A
ETE-CT-16-12	12	16VCT@0.80A
ETE-CT-16-30	30	16VCT@2.0A
ETE-CT-16-56	56	16VCT@3.5A
ETE-CT-16-100	100	16VCT@6.25A
ETE-CT-20-6	6	20VCT@0.3A
ETE-CT-20-12	12	20VCT@0.6A
ETE-CT-20-30	30	20VCT@1.5A
ETE-CT-20-56	56	20VCT@2.8A
ETE-CT-20-100	100	20VCT@5.0A
ETE-CT-24-6	6	24VCT@0.25A
ETE-CT-24-12	12	24VCT@0.5A
ETE-CT-24-30	30	24VCT@1.25A
ETE-CT-24-56	56	24VCT@2.4A
ETE-CT-24-100	100	24VCT@4.0A
ETE-CT-28-6	6	28VCT@0.2A
ETE-CT-28-12	12	28VCT@0.42A
ETE-CT-28-30	30	28VCT@1.1A
ETE-CT-28-56	56	28VCT@2.0A
ETE-CT-28-100	100	28VCT@3.6A
ETE-CT-36-6	6	36VCT@0.17A
ETE-CT-36-12	12	36VCT@0.35A
ETE-CT-36-30	30	36VCT@0.85A
ETE-CT-36-56	56	36VCT@1.5A
ETE-CT-36-100	100	36VCT@2.8A
ETE-CT-48-6	6	48VCT@0.125A
ETE-CT-48-12	12	48VCT@0.25A
ETE-CT-48-30	30	48VCT@0.63A
ETE-CT-48-56	56	48VCT@1.2A
ETE-CT-48-100	100	48VCT@2.0A
ETE-CT-56-6	6	56VCT@0.11A
ETE-CT-56-12	12	56VCT@0.22A
ETE-CT-56-30	30	56VCT@0.54A
ETE-CT-56-56	56	56VCT@1.0A
ETE-CT-56-100	100	56VCT@1.8A
ETE-CT-120-6	6	120VCT@0.05A
ETE-CT-120-12	12	120VCT@0.1A
ETE-CT-120-30	30	120VCT@0.25A
ETE-CT-120-56	56	120VCT@0.5A
ETE-CT-120-100	100	120VCT@0.85A

LAMINATED TRANSFORMERS　　EI型叠片式变压器(ST系列)

Low Frequency, Open-Style Laminated, Split Bobbin, Horizontal Plug-In Series (Single 115V)

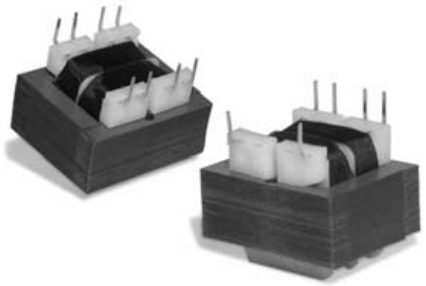

RoHS 2002/95/EC

特性 General Specification:

- 功率 Power—1.1VA to36VA
- 绝缘强度 Dielectric Strength—2500VRMS Hipot
- 初级 Primary—单组输入 Single primary (115V-50/60Hz)
- 次级 Secondary—串联或并联式 Series or parallel secondaries
- 端子 Terminals—印刷电路板安装 Printed circuit mount
- 绝缘 Insulation—Class B（130℃）

符合标准Agency Standards:

- UL, compliant to UL 506 / UL5085-2.
- CSA, compliant to CSA 22.2 #66.2

机械结构 Mechanical　　原理图 Schematics

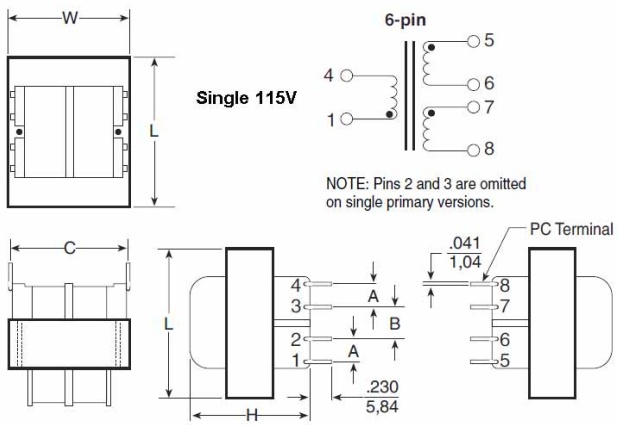

参考尺寸 Dimensions (mm

VA (Size)	Wt. (kg.)	L	W	H	A	B	C
1.1	0.08	35.0	28.5	24.0	6.35	6.35	30.5
2.4	0.12	35.0	28.5	30.0	6.35	6.35	30.5
6.0	0.20	41.0	33.5	33.5	6.35	8.89	32.5
12.0	0.32	48.0	40.0	36.5	7.62	10.16	35.8
20.0	0.37	57.0	47.5	36.5	7.62	10.16	40.6
36.0	0.50	66.0	55.0	40.0	10.16	10.16	45.7

型号 Part No. (Single 115V)	功率 VA （Size）	次级额定值 Secondary RMS Rating	
		串联 Series	并联 Parallel
ETE-ST-10-1.1S	1.1	10VCT@0.11A	5V@0.22A
ETE-ST-10-2.4S	2.4	10VCT@0.25A	5V@0.5A
ETE-ST-10-6S	6.0	10VCT@0.6A	5V@1.2A
ETE-ST-10-12S	12.0	10VCT@1.2A	5V@2.4A
ETE-ST-10-20S	20.0	10VCT@2.0A	5V@4.0A
ETE-ST-10-36S	36.0	10VCT@3.6A	5V@7.2A
ETE-ST-12-1.1S	1.1	12.6VCT@0.09A	6.3V@0.18A
ETE-ST-12-2.4S	2.4	12.6VCT@0.2A	6.3V@0.4A
ETE-ST-12-6S	6.0	12.6VCT@0.5A	6.3V@1.0A
ETE-ST-12-12S	12.0	12.6VCT@1.0A	6.3V@2.0A
ETE-ST-12-20S	20.0	12.6VCT@1.6A	6.3V@3.2A
ETE-ST-12-36S	36.0	12.6VCT@2.85A	6.3V@5.7A
ETE-ST-16-1.1S	1.1	16VCT@0.07A	8V@0.14A
ETE-ST-16-2.4S	2.4	16VCT@0.15A	8V@0.3A
ETE-ST-16-6S	6.0	16VCT@0.4A	8V@0.8A
ETE-ST-16-12S	12.0	16VCT@0.8A	8V@1.6A
ETE-ST-16-20S	20.0	16VCT@1.25A	8V@2.5A
ETE-ST-16-36S	36.0	16VCT@2.25A	8V@4.5A
ETE-ST-20-1.1S	1.1	20VCT@0.055A	10V@0.11A
ETE-ST-20-2.4S	2.4	20VCT@0.12A	10V@0.24A
ETE-ST-20-6S	6.0	20VCT@0.03A	10V@0.6A
ETE-ST-20-12S	12.0	20VCT@0.06A	10V@1.2A
ETE-ST-20-20S	20.0	20VCT@1.0A	10V@2.0A
ETE-ST-20-36S	36.0	20VCT@1.8A	10V@3.6A
ETE-ST-24-1.1S	1.1	24VCT@0.045A	12V@0.09A
ETE-ST-24-2.4S	2.4	24VCT@0.1A	12V@0.2A
ETE-ST-24-6S	6.0	24VCT@0.25A	12V@0.5A
ETE-ST-24-12S	12.0	24VCT@0.5A	12V@1.0A
ETE-ST-24-20S	20.0	24VCT@0.8A	12V@1.6A
ETE-ST-24-36S	36.0	24VCT@1.5A	12V@3.0A
ETE-ST-28-1.1S	1.1	28VCT@0.04A	14V@0.08A
ETE-ST-28-2.4S	2.4	28VCT@0.085A	14V@0.17A
ETE-ST-28-6S	6.0	28VCT@0.2A	14V@0.4A
ETE-ST-28-12S	12.0	28VCT@0.42A	14V@0.84A
ETE-ST-28-20S	20.0	28VCT@0.7A	14V@1.4A
ETE-ST-28-36S	36.0	28VCT@1.3A	14V@2.6A
ETE-ST-36-1.1S	1.1	36VCT@0.03A	18V@0.06A
ETE-ST-36-2.4S	2.4	36VCT@0.065A	18V@0.13A
ETE-ST-36-6S	6.0	36VCT@0.17A	18V@0.34A
ETE-ST-36-12S	12.0	36VCT@0.35A	18V@0.7A
ETE-ST-36-20S	20.0	36VCT@0.55A	18V@1.1A
ETE-ST-36-36S	36.0	36VCT@1.0A	18V@2.0A
ETE-ST-48-1.1S	1.1	48VCT@0.023A	24V@0.046A
ETE-ST-48-2.4S	2.4	48VCT@0.05A	24V@0.1A
ETE-ST-48-6S	6.0	48VCT@0.125A	24V@0.25A
ETE-ST-48-12S	12.0	48VCT@0.25A	24V@0.5A
ETE-ST-48-20S	20.0	48VCT@0.4A	24V@0.8A
ETE-ST-48-36S	36.0	48VCT@0.75A	24V@1.5A
ETE-ST-56-1.1S	1.1	56VCT@0.02A	28V@0.04A
ETE-ST-56-2.4S	2.4	56VCT@0.045A	28V@0.09A
ETE-ST-56-6S	6.0	56VCT@0.11A	28V@0.22A
ETE-ST-56-12S	12.0	56VCT@0.22A	28V@0.44A
ETE-ST-56-20S	20.0	56VCT@0.35A	28V@0.7A
ETE-ST-56-36S	36.0	56VCT@0.65A	28V@1.3A
ETE-ST-120-1.1S	1.1	120VCT@0.01A	60V@0.02A
ETE-ST-120-2.4S	2.4	120VCT@0.02A	60V@0.04A
ETE-ST-120-6S	6.0	120VCT@0.05A	60V@0.1A
ETE-ST-120-12S	12.0	120VCT@0.1A	60V@0.2A
ETE-ST-120-20S	20.0	120VCT@0.16A	60V@0.32A
ETE-ST-120-36S	36.0	120VCT@0.3A	60V@0.6A

LAMINATED TRANSFORMERS　　EI型叠片式变压器(ST系列)

Low Frequency, Open-Style Laminated, Split Bobbin, Horizontal Plug-In Series (Dual 115/230V)

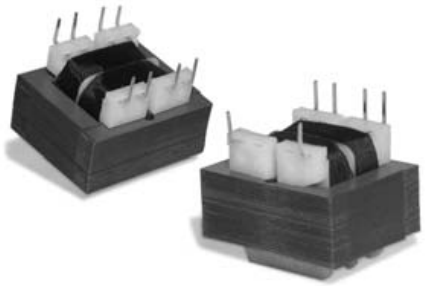

RoHS 2002/95/EC

特性 General Specification:

- 功率 Power—1.1VA to36VA
- 绝缘强度 Dielectric Strength—2500VRMS Hipot
- 初级 Primary—双组输入 Dual primaries(115/230V-50/60Hz)
- 次级 Secondary—串联或并联式 Series or parallel secondaries
- 端子 Terminals—印刷电路板安装 Printed circuit mount
- 绝缘 Insulation—Class B（130℃）

符合标准Agency Standards:

- UL, compliant to UL 506 / UL5085-2.
- CSA, compliant to CSA 22.2 #66.2

机械结构 Mechanical　　原理图 Schematics

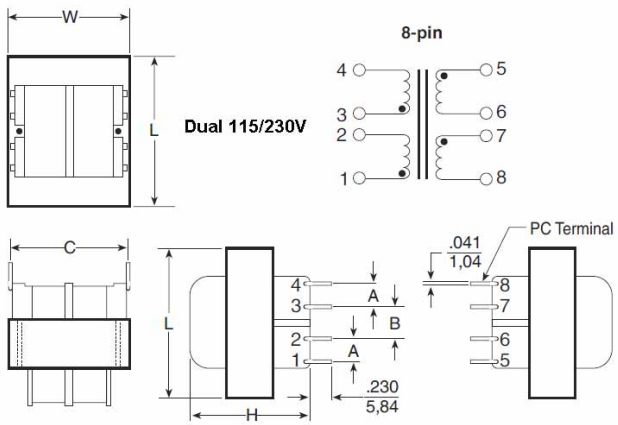

参考尺寸 Dimensions (mm)

VA (Size)	Wt. (kg.)	L	W	H	A	B	C
1.1	0.08	35.0	28.5	24.0	6.35	6.35	30.5
2.4	0.12	35.0	28.5	30.0	6.35	6.35	30.5
6.0	0.20	41.0	33.5	33.5	6.35	8.89	32.5
12.0	0.32	48.0	40.0	36.5	7.62	10.16	35.8
20.0	0.37	57.0	47.5	36.5	7.62	10.16	40.6
36.0	0.50	66.0	55.0	40.0	10.16	10.16	45.7

型号 Part No. (Dual115/230V)	功率 VA （Size）	次级额定值 Secondary RMS Rating	
		串联 Series	并联 Parallel
ETE-ST-10-1.1	1.1	10VCT@0.11A	5V@0.22A
ETE-ST-10-2.4	2.4	10VCT@0.25A	5V@0.5A
ETE-ST-10-6	6.0	10VCT@0.6A	5V@1.2A
ETE-ST-10-12	12.0	10VCT@1.2A	5V@2.4A
ETE-ST-10-20	20.0	10VCT@2.0A	5V@4.0A
ETE-ST-10-36	36.0	10VCT@3.6A	5V@7.2A
ETE-ST-12-1.1	1.1	12.6VCT@0.09A	6.3V@0.18A
ETE-ST-12-2.4	2.4	12.6VCT@0.2A	6.3V@0.4A
ETE-ST-12-6	6.0	12.6VCT@0.5A	6.3V@1.0A
ETE-ST-12-12	12.0	12.6VCT@1.0A	6.3V@2.0A
ETE-ST-12-20	20.0	12.6VCT@1.6A	6.3V@3.2A
ETE-ST-12-36	36.0	12.6VCT@2.85A	6.3V@5.7A
ETE-ST-16-1.1	1.1	16VCT@0.07A	8V@0.14A
ETE-ST-16-2.4	2.4	16VCT@0.15A	8V@0.3A
ETE-ST-16-6	6.0	16VCT@0.4A	8V@0.8A
ETE-ST-16-12	12.0	16VCT@0.8A	8V@1.6A
ETE-ST-16-20	20.0	16VCT@1.25A	8V@2.5A
ETE-ST-16-36	36.0	16VCT@2.25A	8V@4.5A
ETE-ST-20-1.1	1.1	20VCT@0.055A	10V@0.11A
ETE-ST-20-2.4	2.4	20VCT@0.12A	10V@0.24A
ETE-ST-20-6	6.0	20VCT@0.03A	10V@0.6A
ETE-ST-20-12	12.0	20VCT@0.06A	10V@1.2A
ETE-ST-20-20	20.0	20VCT@1.0A	10V@2.0A
ETE-ST-20-36	36.0	20VCT@1.8A	10V@3.6A
ETE-ST-24-1.1	1.1	24VCT@0.045A	12V@0.09A
ETE-ST-24-2.4	2.4	24VCT@0.1A	12V@0.2A
ETE-ST-24-6	6.0	24VCT@0.25A	12V@0.5A
ETE-ST-24-12	12.0	24VCT@0.5A	12V@1.0A
ETE-ST-24-20	20.0	24VCT@0.8A	12V@1.6A
ETE-ST-24-36	36.0	24VCT@1.5A	12V@3.0A
ETE-ST-28-1.1	1.1	28VCT@0.04A	14V@0.08A
ETE-ST-28-2.4	2.4	28VCT@0.085A	14V@0.17A
ETE-ST-28-6	6.0	28VCT@0.2A	14V@0.4A
ETE-ST-28-12	12.0	28VCT@0.42A	14V@0.84A
ETE-ST-28-20	20.0	28VCT@0.7A	14V@1.4A
ETE-ST-28-36	36.0	28VCT@1.3A	14V@2.6A
ETE-ST-36-1.1	1.1	36VCT@0.03A	18V@0.06A
ETE-ST-36-2.4	2.4	36VCT@0.065A	18V@0.13A
ETE-ST-36-6	6.0	36VCT@0.17A	18V@0.34A
ETE-ST-36-12	12.0	36VCT@0.35A	18V@0.7A
ETE-ST-36-20	20.0	36VCT@0.55A	18V@1.1A
ETE-ST-36-36	36.0	36VCT@1.0A	18V@2.0A
ETE-ST-48-1.1	1.1	48VCT@0.023A	24V@0.046A
ETE-ST-48-2.4	2.4	48VCT@0.05A	24V@0.1A
ETE-ST-48-6	6.0	48VCT@0.125A	24V@0.25A
ETE-ST-48-12	12.0	48VCT@0.25A	24V@0.5A
ETE-ST-48-20	20.0	48VCT@0.4A	24V@0.8A
ETE-ST-48-36	36.0	48VCT@0.75A	24V@1.5A
ETE-ST-56-1.1	1.1	56VCT@0.02A	28V@0.04A
ETE-ST-56-2.4	2.4	56VCT@0.045A	28V@0.09A
ETE-ST-56-6	6.0	56VCT@0.11A	28V@0.22A
ETE-ST-56-12	12.0	56VCT@0.22A	28V@0.44A
ETE-ST-56-20	20.0	56VCT@0.35A	28V@0.7A
ETE-ST-56-36	36.0	56VCT@0.65A	28V@1.3A
ETE-ST-120-1.1	1.1	120VCT@0.01A	60V@0.02A
ETE-ST-120-2.4	2.4	120VCT@0.02A	60V@0.04A
ETE-ST-120-6	6.0	120VCT@0.05A	60V@0.1A
ETE-ST-120-12	12.0	120VCT@0.1A	60V@0.2A
ETE-ST-120-20	20.0	120VCT@0.16A	60V@0.32A
ETE-ST-120-36	36.0	120VCT@0.3A	60V@0.6A

中策亿特电子有限公司 ZHONGCE E.T ELECTRONICS CO.,LTD.
TEL: 0086-574-88156789, FAX: 0086-574-88156799, www.zcet.cn

LAMINATED TRANSFORMERS　　EI型叠片式变压器(VP系列)

Low Frequency, Open-Style Laminated, Concentric Vertical Profile, PC Plug-In Series (Single 115V)

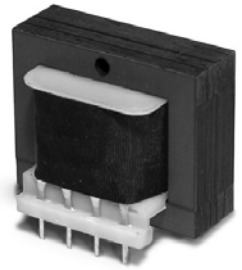

特性 General Specification:

- 功率 Power—1.0VA to24VA
- 绝缘强度 Dielectric Strength—1500VRMS Hipot
- 初级 Primary—单组输入 Single primary (115V-50/60Hz)
- 次级 Secondary—串联或并联式 Series or parallel secondaries
- 端子 Terminals—印刷电路板安装 Printed circuit mount
- 绝缘 Insulation—Class B（130℃）

符合标准Agency Standards:

- UL, compliant to UL 506 / UL5085-2.
- CSA, compliant to CSA 22.2 #66.2

机械结构 Mechanical　　原理图 Schematics

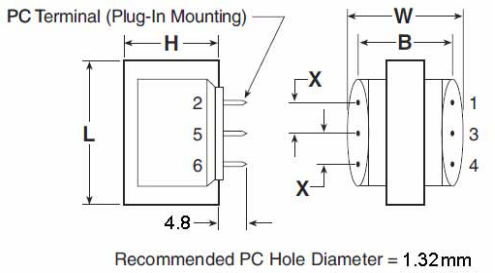

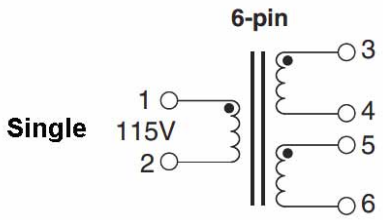

参考尺寸 Dimensions (mm)

VA (Size)	Wt. (kg.)	L	W	H	X (6pin)	B
1.0	0.07	25.4	35.0	21.5	6.35	30.5
1.2	0.08	35.0	28.5	30.0	7.95	25.5
4.4	0.14	41.0	31.0	35.0	10.16	28.0
10.0	0.23	48.0	36.5	41.5	10.16	33.0
24.0	0.34	41.0	57.5	35.0	10.16	53.5

型号 Part No. (Single 115V)	功率 VA （Size）	次级额定值 Secondary RMS	
		串联 Series	并联 Parallel
ETE-VP-10-1S	1.0	10VCT@90mA	5V@180mA
ETE-VP-10-1.2S	1.2	10VCT@120mA	5V@240mA
ETE-VP-10-4.4S	4.4	10VCT@440mA	5V@880mA
ETE-VP-10-10S	10	10VCT@1A	5V@2A
ETE-VP-10-24S	24	10VCT@2.4A	5V@4.8A
ETE-VP-12-1S	1.0	12.6VCT@70mA	6.3V@140mA
ETE-VP-12-1.2S	1.2	12.6VCT@100mA	6.3V@200mA
ETE-VP-12-4.4S	4.4	12.6VCT@350mA	6.3V@700mA
ETE-VP-12-10S	10	12.6VCT@800mA	6.3V@1.6A
ETE-VP-12-24S	24	12.6VCT@2A	6.3V@4A
ETE-VP-16-1S	1.0	16VCT@55mA	8V@110mA
ETE-VP-16-1.2S	1.2	16VCT@75mA	8V@150mA
ETE-VP-16-4.4S	4.4	16VCT@260mA	8V@520mA
ETE-VP-16-10S	10	16VCT@640mA	8V@1.28A
ETE-VP-16-24S	24	16VCT@1.5A	8V@3.0A
ETE-VP-20-1S	1.0	20VCT@45mA	10V@90mA
ETE-VP-20-1.2S	1.2	20VCT@60mA	10V@120mA
ETE-VP-20-4.4S	4.4	20VCT@220mA	10V@440mA
ETE-VP-20-10S	10	20VCT@500mA	10V@1.0A
ETE-VP-20-24S	24	20VCT@1.2A	10V@2.4A
ETE-VP-24-1S	1.0	24VCT@35mA	12V@70mA
ETE-VP-24-1.2S	1.2	24VCT@50mA	12V@100mA
ETE-VP-24-4.4S	4.4	24VCT@180mA	12V@360mA
ETE-VP-24-10S	10	24VCT@450mA	12V@900mA
ETE-VP-24-24S	24	24VCT@1.0A	12V@2.0A
ETE-VP-28-1S	1.0	28VCT@30mA	14V@60mA
ETE-VP-28-1.2S	1.2	28VCT@40mA	14V@80mA
ETE-VP-28-4.4S	4.4	28VCT@160mA	14V@320mA
ETE-VP-28-10S	10	28VCT@360mA	14V@720mA
ETE-VP-28-24S	24	28VCT@800mA	14V@1.6A
ETE-VP-34-1S	1.0	34VCT@25mA	17V@50mA
ETE-VP-34-1.2S	1.2	34VCT@35mA	17V@70mA
ETE-VP-34-4.4S	4.4	34VCT@125mA	17V@250mA
ETE-VP-34-10S	10	34VCT@300mA	17V@600mA
ETE-VP-34-24S	24	34VCT@700mA	17V@1.4A
ETE-VP-40-1S	1.0	40VCT@20mA	20V@40mA
ETE-VP-40-1.2S	1.2	40VCT@30mA	20V@60mA
ETE-VP-40-4.4S	4.4	40VCT@110mA	20V@220mA
ETE-VP-40-10S	10	40VCT@250mA	20V@500mA
ETE-VP-40-24S	24	40VCT@600mA	20V@1.2A
ETE-VP-56-1S	1.0	56VCT@15mA	28V@30mA
ETE-VP-56-1.2S	1.2	56VCT@20mA	28V@40mA
ETE-VP-56-4.4S	4.4	56VCT@80mA	28V@160mA
ETE-VP-56-10S	10	56VCT@180mA	28V@360mA
ETE-VP-56-24S	24	56VCT@420mA	28V@840mA
ETE-VP-120-1S	1.0	120VCT@8mA	60V@16mA
ETE-VP-120-1.2S	1.2	120VCT@10mA	60V@20mA
ETE-VP-120-4.4S	4.4	120VCT@35mA	60V@70mA
ETE-VP-120-10S	10	120VCT@85mA	60V@170mA
ETE-VP-120-24S	24	120VCT@200mA	60V@400mA

LAMINATED TRANSFORMERS　　EI型叠片式变压器(VP系列)

Low Frequency, Open-Style Laminated, Concentric Vertical Profile, PC Plug-In Series (Dual 115/230V)

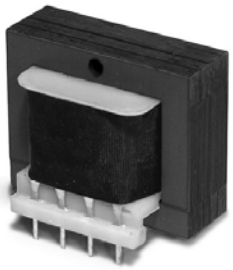

特性 General Specification:

- 功率 Power—1.0VA to24VA
- 绝缘强度 Dielectric Strength—1500VRMS Hipot
- 初级 Primary—双组输入 Dual primaries(115/230V-50/60Hz)
- 次级 Secondary—串联或并联式 Series or parallel secondaries
- 端子 Terminals—印刷电路板安装 Printed circuit mount
- 绝缘 Insulation—Class B（130℃）

符合标准Agency Standards:

- UL, compliant to UL 506 / UL5085-2.
- CSA, compliant to CSA 22.2 #66.2

机械结构 Mechanical　　原理图 Schematics

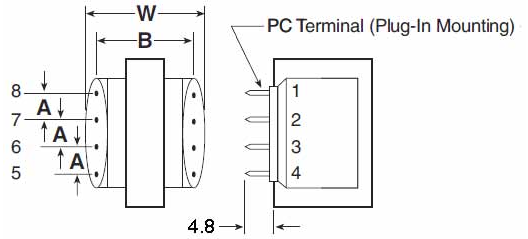

Recommended PC Hole Diameter = 1.32mm

Dual 115/230V

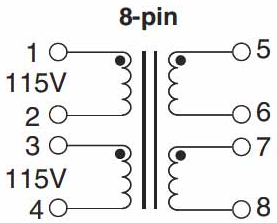

参考尺寸 Dimensions (mm)

VA (Size)	Wt. (kg.)	L	W	H	A (8pin)	B
1.0	0.07	25.4	35.0	21.5	5.08	30.5
1.2	0.08	35.0	28.5	30.0	5.08	25.5
4.4	0.14	41.0	31.0	35.0	6.35	28.0
10.0	0.23	48.0	36.5	41.5	6.35	33.0
24.0	0.34	41.0	57.5	35.0	6.35	53.5

型号 Part No. (Dual115/230V)	功率 VA （Size）	次级额定值 Secondary RMS	
		串联 Series	并联 Parallel
ETE-VP-10-1	1.0	10VCT@90mA	5V@180mA
ETE-VP-10-1.2	1.2	10VCT@120mA	5V@240mA
ETE-VP-10-4.4	4.4	10VCT@440mA	5V@880mA
ETE-VP-10-10	10	10VCT@1A	5V@2A
ETE-VP-10-24	24	10VCT@2.4A	5V@4.8A
ETE-VP-12-1	1.0	12.6VCT@70mA	6.3V@140mA
ETE-VP-12-1.2	1.2	12.6VCT@100mA	6.3V@200mA
ETE-VP-12-4.4	4.4	12.6VCT@350mA	6.3V@700mA
ETE-VP-12-10	10	12.6VCT@800mA	6.3V@1.6A
ETE-VP-12-24	24	12.6VCT@2A	6.3V@4A
ETE-VP-16-1	1.0	16VCT@55mA	8V@110mA
ETE-VP-16-1.2	1.2	16VCT@75mA	8V@150mA
ETE-VP-16-4.4	4.4	16VCT@260mA	8V@520mA
ETE-VP-16-10	10	16VCT@640mA	8V@1.28A
ETE-VP-16-24	24	16VCT@1.5A	8V@3.0A
ETE-VP-20-1	1.0	20VCT@45mA	10V@90mA
ETE-VP-20-1.2	1.2	20VCT@60mA	10V@120mA
ETE-VP-20-4.4	4.4	20VCT@220mA	10V@440mA
ETE-VP-20-10	10	20VCT@500mA	10V@1.0A
ETE-VP-20-24	24	20VCT@1.2A	10V@2.4A
ETE-VP-24-1	1.0	24VCT@35mA	12V@70mA
ETE-VP-24-1.2	1.2	24VCT@50mA	12V@100mA
ETE-VP-24-4.4	4.4	24VCT@180mA	12V@360mA
ETE-VP-24-10	10	24VCT@450mA	12V@900mA
ETE-VP-24-24	24	24VCT@1.0A	12V@2.0A
ETE-VP-28-1	1.0	28VCT@30mA	14V@60mA
ETE-VP-28-1.2	1.2	28VCT@40mA	14V@80mA
ETE-VP-28-4.4	4.4	28VCT@160mA	14V@320mA
ETE-VP-28-10	10	28VCT@360mA	14V@720mA
ETE-VP-28-24	24	28VCT@800mA	14V@1.6A
ETE-VP-34-1	1.0	34VCT@25mA	17V@50mA
ETE-VP-34-1.2	1.2	34VCT@35mA	17V@70mA
ETE-VP-34-4.4	4.4	34VCT@125mA	17V@250mA
ETE-VP-34-10	10	34VCT@300mA	17V@600mA
ETE-VP-34-24	24	34VCT@700mA	17V@1.4A
ETE-VP-40-1	1.0	40VCT@20mA	20V@40mA
ETE-VP-40-1.2	1.2	40VCT@30mA	20V@60mA
ETE-VP-40-4.4	4.4	40VCT@110mA	20V@220mA
ETE-VP-40-10	10	40VCT@250mA	20V@500mA
ETE-VP-40-24	24	40VCT@600mA	20V@1.2A
ETE-VP-56-1	1.0	56VCT@15mA	28V@30mA
ETE-VP-56-1.2	1.2	56VCT@20mA	28V@40mA
ETE-VP-56-4.4	4.4	56VCT@80mA	28V@160mA
ETE-VP-56-10	10	56VCT@180mA	28V@360mA
ETE-VP-56-24	24	56VCT@420mA	28V@840mA
ETE-VP-120-1	1.0	120VCT@8mA	60V@16mA
ETE-VP-120-1.2	1.2	120VCT@10mA	60V@20mA
ETE-VP-120-4.4	4.4	120VCT@35mA	60V@70mA
ETE-VP-120-10	10	120VCT@85mA	60V@170mA
ETE-VP-120-24	24	120VCT@200mA	60V@400mA

中策亿特电子有限公司 ZHONGCE E.T ELECTRONICS CO.,LTD.
TEL: 0086-574-88156789, FAX: 0086-574-88156799, www.zcet.cn

LAMINATED TRANSFORMERS　　EI型叠片式变压器(HP系列)

Low Frequency, Open-Style Laminated, International PC Plug-In Series

RoHS 2002/95/EC

特性 General Specification:

- 功率 Power—2.5VA to 56VA
- 绝缘强度 Dielectric Strength—4000VRMS Hipot
- 初级 Primary—双组输入 Dual primaries(115/230V-50/60Hz)
- 次级 Secondary—串联或并联式 Series or parallel secondaries
- 端子 Terminals—印刷电路板安装 Printed circuit mount
- 绝缘 Insulation—Class B（130℃）

符合标准Agency Standards:

- UL, compliant to UL 506 / UL5085-2.
- CSA, compliant to CSA 22.2 #66.2

型　号 Part No.	功率 VA（Size）	次级额定值 Secondary RMS	
		串联 Series	并联 Parallel
ETE-HP-10-2.5	2.5	10VCT@0.25A	5V@0.50A
ETE-HP-10-5	5	10VCT@0.5A	5V@1.0A
ETE-HP-10-10	10	10VCT@1.0A	5V@2.0A
ETE-HP-10-20	20	10VCT@2.0A	5V@4.0A
ETE-HP-10-30	30	10VCT@3.0A	5V@6.0A
ETE-HP-10-56	56	10VCT@5.6A	5V@11.2A
ETE-HP-12.6-2.5	2.5	12.6VCT@0.2A	6.3V@0.4A
ETE-HP-12.6-5	5	12.6VCT@0.4A	6.3V@0.8A
ETE-HP-12.6-10	10	12.6VCT@0.8A	6.3V@1.6A
ETE-HP-12.6-20	20	12.6VCT@1.6A	6.3V@3.2A
ETE-HP-12.6-30	30	12.6VCT@2.4A	6.3V@4.8A
ETE-HP-12.6-56	56	12.6VCT@4.4A	6.3V@8.8A
ETE-HP-16-2.5	2.5	16VCT@0.15A	8V@0.30A
ETE-HP-16-5	5	16VCT@0.31A	8V@0.62A
ETE-HP-16-10	10	16VCT@0.62A	8V@1.25A
ETE-HP-16-20	20	16VCT@1.25A	8V@2.50A
ETE-HP-16-30	30	16VCT@1.90A	8V@3.80A
ETE-HP-16-56	56	16VCT@3.50A	8V@7.00A
ETE-HP-20-2.5	2.5	20VCT@0.12A	10V@0.24A
ETE-HP-20-5	5	20VCT@0.25A	10V@0.50A
ETE-HP-20-10	10	20VCT@0.50A	10V@1.00A
ETE-HP-20-20	20	20VCT@1.00A	10V@2.00A
ETE-HP-20-30	30	20VCT@1.50A	10V@3.00A
ETE-HP-20-56	56	20VCT@2.80A	10V@5.60A
ETE-HP-24-2.5	2.5	24VCT@0.10A	12V@0.20A
ETE-HP-24-5	5	24VCT@0.21A	12V@0.42A
ETE-HP-24-10	10	24VCT@0.42A	12V@0.84A
ETE-HP-24-20	20	24VCT@0.83A	12V@1.66A
ETE-HP-24-30	30	24VCT@1.25A	12V@2.50A
ETE-HP-24-56	56	24VCT@2.33A	12V@4.66A
ETE-HP-28-2.5	2.5	28VCT@0.09A	14V@0.18A
ETE-HP-28-5	5	28VCT@0.18A	14V@0.36A
ETE-HP-28-10	10	28VCT@0.36A	14V@0.72A
ETE-HP-28-20	20	28VCT@0.72A	14V@1.44A
ETE-HP-28-30	30	28VCT@1.06A	14V@2.12A
ETE-HP-28-56	56	28VCT@2.00A	14V@4.00A
ETE-HP-36-2.5	2.5	36VCT@0.07A	18V@0.14A
ETE-HP-36-5	5	36VCT@0.14A	18V@0.28A
ETE-HP-36-10	10	36VCT@0.28A	18V@0.56A
ETE-HP-36-20	20	36VCT@0.56A	18V@1.12A
ETE-HP-36-30	30	36VCT@0.82A	18V@1.64A
ETE-HP-36-56	56	36VCT@1.56A	18V@3.12A

机械结构 Mechanical

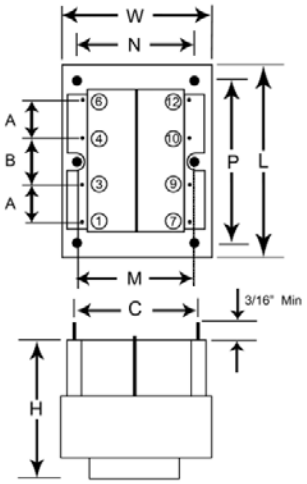

Schematic

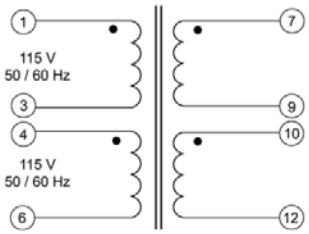

参考尺寸 Dimensions (mm)

VA (Size)	Wt. (kg.)	L	W	H	A	B	C	SQ.PIN DIM.	MTG.DIM			MTG. SCREW
									M	N	P	
2.5	0.114	41.0	36.5	28.5	5.08	6.35	25.4	0.635	26.92			#4
5	0.170	41.0	36.5	35.0	5.08	10.16	25.4	0.635	26.92			#4
10	0.245	48.0	40.0	35.0	5.08	10.16	29.0	0.965	31.75			#4
20	0.410	57.0	47.5	41.5	10.16	10.16	37.1	0.965	38.10			#4
30	0.525	66.0	55.5	40.0	13.97	6.985	42.7	1.143		44.45	55.37	#6
56	0.775	76.2	63.5	46.0	15.24	7.62	48.3	1.143		50.80	63.50	#6

中策亿特电子有限公司 ZHONGCE E.T ELECTRONICS CO.,LTD.
TEL: 0086-574-88156789, FAX: 0086-574-88156799, www.zcet.cn

LAMINATED TRANSFORMERS　　EI型自耦变压器(ZK系列)

Low Frequency, Open-Style Laminated, Autotransformer ZK Series

RoHS 2002/95/EC

特性 General Specification:

- 功率 Power—100VA to2400VA
- 绝缘强度 Dielectric Strength—2000VRMS Hipot
- 初级 Primary—0-400V
- 频率 Frequency—50/60Hz
- 次级 Secondary—0-400V
- 环境温度 Ambient temp.(t)—40℃
- 绝缘 Insulation—Class B（130℃）
- 保护等级 Degree of protection—IP00

符合标准Agency Standards:

- EN61558-2-13

机械结构 Mechanical

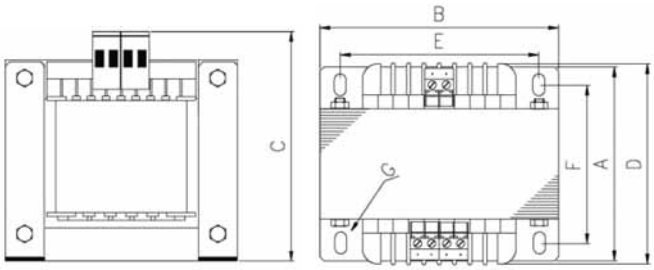

标准类型 Standard types

型　号 Part No.	电压(V) Voltage	功率(VA) Power
ETE-ZK-76A-41	0-110-127-225-235	100
ETE-ZK-86B-42	0-110-127-225-235	220
ETE-ZK-96C-43	0-110-127-225-235	400
ETE-ZK-76A-31	0-225-235-400	140
ETE-ZK-86B-32	0-225-235-400	250
ETE-ZK-96C-33	0-225-235-400	500
ETE-ZK-120B-34	0-225-235-400	800
ETE-ZK-120C-35	0-225-235-400	1200
ETE-ZK-84B-51	0-200-210-220-230-240	600
ETE-ZK-96C-52	0-200-210-220-230-240	1300
ETE-ZK-120B-53	0-200-210-220-230-240	2400

电机控制标准类型 Standard types for motor-control

型　号 Part No.	电压(V) Voltage	电流(A) Current
ETE-ZK-96C-71	0-80-100-125-150-170-190-230	4.6
ETE-ZK-120A-72	0-80-100-125-150-170-190-230	5.7
ETE-ZK-120B-73	0-80-100-125-150-170-190-230	7.7
ETE-ZK-150A-74	0-80-100-125-150-170-190-230	11.9

Wiring diagram

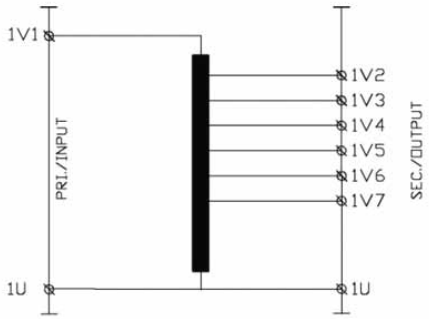

参考尺寸 Dimensions (mm)

Type	A	B	C	D	E	F	G	Weight(Kg)
ETE-ZK-76A	70.0	76.2	89.0	61.0	63.5	52.0	5.2x9.5	1.2
ETE-ZK-86B	97.0	85.8	95.0	81.0	71.5	68.5	5.2x9.5	2.4
ETE-ZK-96C	102.0	96.0	105.0	95.0	80.0	86.5	5.2x9.5	4.0
ETE-ZK-120B	102.0	120.0	120.0	100.0	100.0	79.5	5.2x9.5	5.7
ETE-ZK-150A	108.0	150.0	148.0	110.0	125.0	78.5	14.3x7.2	8.9

接受客户定做/Custom versions available upon request
未经通知可以自行调整参数/All data are subject to modification without prior notice

中策亿特电子有限公司 ZHONGCE E.T ELECTRONICS CO.,LTD.
TEL: 0086-574-88156789, FAX: 0086-574-88156799, www.zcet.cn

LAMINATED TRANSFORMERS　　EI型控制变压器(GK系列)

Low Frequency, Open-Style Laminated, Isolating Transformer GK Series

RoHS 2002/95/EC

特性 General Specification:

- 功率 Power—60VA to 1000VA
- 绝缘强度 Dielectric Strength—2000VRMS Hipot
- 初级 Primary—0-230-250V, —0-380-400-415-440V
- 频率 Frequency—50/60Hz
- 次级 Secondary—12V, 24V, 32V, 42-48V
- 环境温度 Ambient temp.(t)—40℃
- 绝缘 Insulation—Class B（130℃）
- 保护等级 Degree of protection—IP00

符合标准Agency Standards:

- EN61558-2-6

机械结构 Mechanical

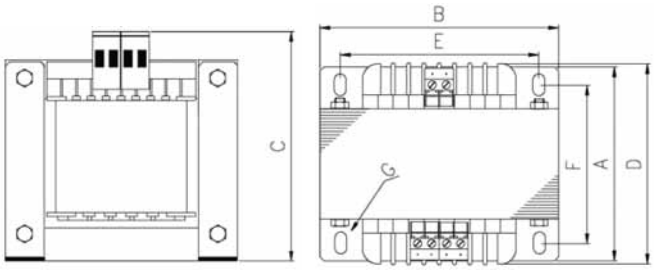

Wiring diagram

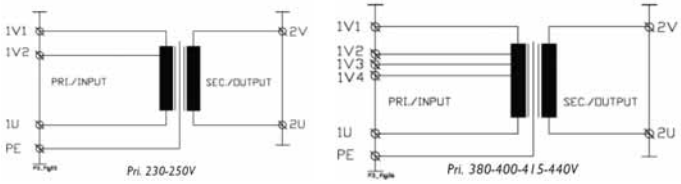

型　号 Part No.	电压(V) Voltage	电流(A) Current	功率(VA) Power
230-250/12V			
ETE-ZK-76A-23012	12	5.0	60
ETE-ZK-86B-23012	12	9.2	110
ETE-ZK-96B-23012	12	13.3	160
ETE-ZK-96C-23012	12	18.3	220
ETE-ZK-120B-23012	12	33.3	400
ETE-ZK-150A-23012	12	41.6	500
230-250/24V			
ETE-ZK-78A-23024	24	2.5	60
ETE-ZK-86B-23024	24	4.6	110
ETE-ZK-96B-23024	24	6.7	160
ETE-ZK-96C-23024	24	9.2	220
ETE-ZK-120B-23024	24	16.7	400
ETE-ZK-150A-23024	24	20.8	500
ETE-ZK-150C-23024	24	29.2	700
ETE-ZK-150D-23024	24	41.7	1000
230-250/32V			
ETE-ZK-76A-23032	32	1.9	60
ETE-ZK-86B-23032	32	3.4	110
ETE-ZK-96B-23032	32	5.0	160
ETE-ZK-96C-23032	32	6.9	220
ETE-ZK-120B-23032	32	12.5	400
230-250/42-48V			
ETE-ZK-76A-2304248	42-48	1.3	60
ETE-ZK-86B-2304248	42-48	2.3	110
ETE-ZK-96B-2304248	42-48	3.2	160
ETE-ZK-96C-2304248	42-48	4.6	220
ETE-ZK-120B-2304248	42-48	8.3	400
380-400-415-440/24V			
ETE-ZK-76A-38024	24	2.5	60
ETE-ZK-86B-38024	24	4.5	110
ETE-ZK-96B-38024	24	6.7	160
ETE-ZK-96C-38024	24	9.2	220
ETE-ZK-120B-38024	24	16.7	400
ETE-ZK-150A-38024	24	20.8	500
ETE-ZK-150C-38024	24	29.2	700
ETE-ZK-150D-38024	24	41.7	1000

参考尺寸 Dimensions (mm)

Type	A	B	C	D	E	F	G	Weight(Kg)
ETE-ZK-76A	70.0	76.2	89.0	61.0	63.5	52.0	5.2x9.5	1.2
ETE-ZK-86B	97.0	85.8	95.0	81.0	71.5	68.5	5.2x9.5	2.4
ETE-ZK-96B	88.0	96.0	105.0	81.0	80.0	72.5	5.2x9.5	3.1
ETE-ZK-96C	102.0	96.0	105.0	95.0	80.0	86.5	5.2x9.5	4.0
ETE-ZK-120B	102.0	120.0	120.0	100.0	100.0	79.5	5.2x9.5	5.7
ETE-ZK-150A	108.0	150.0	148.0	110.0	125.0	78.5	14.3x7.2	8.9
ETE-ZK-150C	138.0	150.0	148.0	135.0	125.0	108.5	14.3x7.2	13.4
ETE-ZK-150D	158.0	150.0	148.0	155.0	125.0	128.5	14.3x7.2	16.7

接受客户定做/Custom versions available upon request
未经通知可以自行调整参数/All data are subject to modification without prior notice

中策亿特电子有限公司 ZHONGCE E.T ELECTRONICS CO.,LTD.
TEL: 0086-574-88156789, FAX: 0086-574-88156799, www.zcet.cn

LAMINATED TRANSFORMERS　　EI型控制变压器(GK系列)

Low Frequency, Open-Style Laminated, Isolating Transformer GK Series

RoHS 2002/95/EC

特性 General Specification:

- 功率 Power—60VA to 1000VA
- 绝缘强度 Dielectric Strength—2000VRMS Hipot
- 初级 Primary—0-230-250V, —0-400-415-440V, —0-660-690V
- 频率 Frequency—50/60Hz
- 次级 Secondary—115V, 230V
- 环境温度 Ambient temp.(t)—40℃
- 绝缘 Insulation—Class B（130℃）
- 保护等级 Degree of protection—IP00

符合标准Agency Standards:

- EN61558-2-4

机械结构 Mechanical

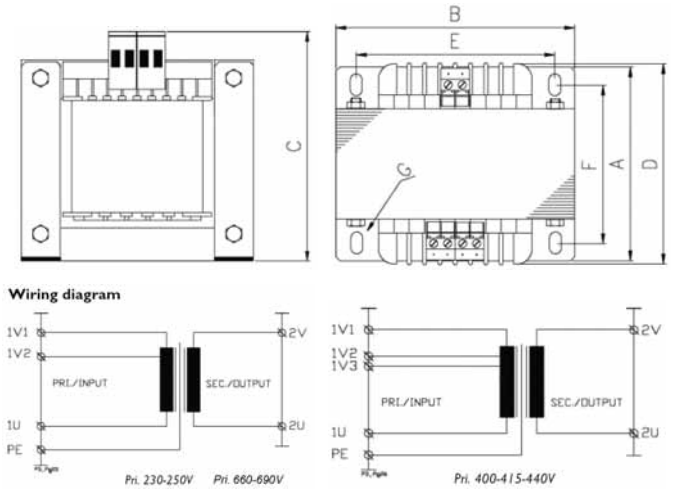

型　号 Part No.	电压(V) Voltage	电流(A) Current	功率(VA) Power
230-250/115V			
ETE-ZK-76A-230115	115	0.5	60
ETE-ZK-86B-230115	115	1.0	110
ETE-ZK-96B-230115	115	1.4	160
ETE-ZK-96C-230115	115	1.9	220
ETE-ZK-120B-230115	115	3.5	400
ETE-ZK-150A-230115	115	4.3	500
ETE-ZK-150C-230115	115	6.1	700
ETE-ZK-150D-230115	115	8.7	1000
230-250/230V			
ETE-ZK-76A-230230	230	0.3	60
ETE-ZK-86B-230230	230	0.5	110
ETE-ZK-96B-230230	230	0.7	160
ETE-ZK-96C-230230	230	1.0	220
ETE-ZK-120B-230230	230	1.5	400
ETE-ZK-150A-230230	230	2.2	500
ETE-ZK-150C-230230	230	3.0	700
ETE-ZK-150D-230230	230	4.4	1000
400-415-440/115V			
ETE-ZK-120B-400115	115	3.4	400
ETE-ZK-150A-400115	115	4.3	500
ETE-ZK-150C-400115	115	6.0	700
ETE-ZK-150D-400115	115	8.7	1000
400-415-440/230V			
ETE-ZK-120B-400230	230	1.7	400
ETE-ZK-150A-400230	230	2.2	500
ETE-ZK-150C-400230	230	3.0	700
ETE-ZK-150D-400230	230	4.4	1000
660-690/230V			
ETE-ZK-120B-660230	230	1.7	400
ETE-ZK-150A-660230	230	2.2	500
ETE-ZK-150C-660230	230	3.0	700
ETE-ZK-150D-660230	230	4.4	1000

参考尺寸 Dimensions (mm)

Type	A	B	C	D	E	F	G	Weight(Kg)
ETE-ZK-76A	70.0	76.2	89.0	61.0	63.5	52.0	5.2x9.5	1.2
ETE-ZK-86B	97.0	85.8	95.0	81.0	71.5	68.5	5.2x9.5	2.4
ETE-ZK-96B	88.0	96.0	105.0	81.0	80.0	72.5	5.2x9.5	3.1
ETE-ZK-96C	102.0	96.0	105.0	95.0	80.0	86.5	5.2x9.5	4.0
ETE-ZK-120B	102.0	120.0	120.0	100.0	100.0	79.5	5.2x9.5	5.7
ETE-ZK-150A	108.0	150.0	148.0	110.0	125.0	78.5	14.3x7.2	8.9
ETE-ZK-150C	138.0	150.0	148.0	135.0	125.0	108.5	14.3x7.2	13.4
ETE-ZK-150D	158.0	150.0	148.0	155.0	125.0	128.5	14.3x7.2	16.7

接受客户定做/Custom versions available upon request
未经通知可以自行调整参数/All data are subject to modification without prior notice

中策亿特电子有限公司 ZHONGCE E.T ELECTRONICS CO.,LTD.
TEL: 0086-574-88156789, FAX: 0086-574-88156799, www.zcet.cn

LAMINATED TRANSFORMERS　　EI型控制变压器(GK系列)

Low Frequency, Open-Style Laminated, Isolating Transformer GK Series

RoHS 2002/95/EC

特性 General Specification:

- 功率 Power—63VA to2400VA
- 绝缘强度 Dielectric Strength—4000VRMS Hipot
- 初级 Primary—0-230-400V
- 频率 Frequency—50/60Hz
- 次级 Secondary—24V,　2x115V
- 环境温度 Ambient temp.(t)—40℃
- 绝缘 Insulation—Class B（130℃）
- 保护等级 Degree of protection—IP00

符合标准Agency Standards:

- EN61558-2-6

型　号 Part No.	电压(V) Voltage	电流(A) Current	功率(VA) Power
230-400/24V			
ETE-ZK-76A-234024	24	2.63	63
ETE-ZK-86B-234024	24	4.17	100
ETE-ZK-96B-234024	24	6.67	160
ETE-ZK-96C-234024	24	10.42	250
ETE-ZK-96D-234024	24	13.33	320
ETE-ZK-120B-234024	24	16.67	400
ETE-ZK-150A-234024	24	20.83	500
ETE-ZK-150B-234024	24	26.25	630
ETE-ZK-150C-234024	24	33.33	800
ETE-ZK-150D-234024	24	41.67	1000
230-400/2X115V			
ETE-ZK-76A-23402115	2x115	2x0.27	63
ETE-ZK-86B-23402115	2x115	2x0.43	100
ETE-ZK-96B-23402115	2x115	2x0.70	160
ETE-ZK-96C-23402115	2x115	2x1.09	250
ETE-ZK-96D-23402115	2x115	2x1.39	320
ETE-ZK-120B-23402115	2x115	2x1.74	400
ETE-ZK-150A-23402115	2x115	2x2.17	500
ETE-ZK-150B-23402115	2x115	2x2.74	630
ETE-ZK-150C-23402115	2x115	2x3.48	800
ETE-ZK-150D-23402115	2x115	2x4.35	1000

机械结构 Mechanical

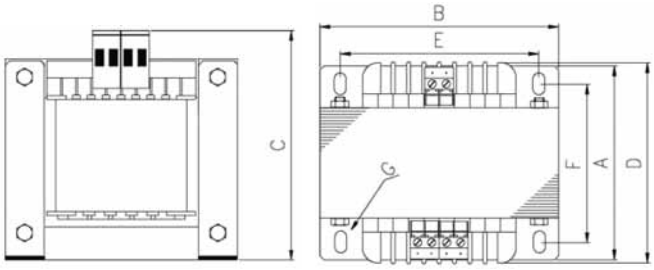

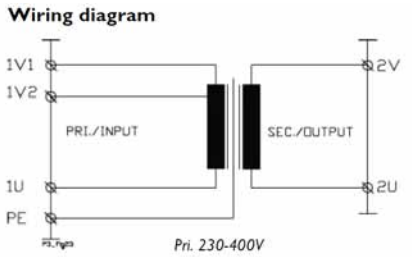

参考尺寸 Dimensions (mm)

Type	A	B	C	D	E	F	G	Weight(Kg)
ETE-ZK-76A	70.0	76.2	89.0	61.0	63.5	52.0	5.2x9.5	1.2
ETE-ZK-86B	97.0	85.8	95.0	81.0	71.5	68.5	5.2x9.5	2.4
ETE-ZK-96B	88.0	96.0	105.0	81.0	80.0	72.5	5.2x9.5	3.1
ETE-ZK-96C	102.0	96.0	105.0	95.0	80.0	86.5	5.2x9.5	4.0
ETE-ZK-96D	107.0	96.0	105.0	95.0	80.0	92.5	5.2x9.5	4.5
ETE-ZK-120B	102.0	120.0	120.0	100.0	100.0	79.5	5.2x9.5	5.7
ETE-ZK-150A	108.0	150.0	148.0	110.0	125.0	78.5	14.3x7.2	8.9
ETE-ZK-150B	123.0	150.0	148.0	122.0	125.0	93.5	14.3x7.2	11.1
ETE-ZK-150C	138.0	150.0	148.0	135.0	125.0	108.5	14.3x7.2	13.4
ETE-ZK-150D	158.0	150.0	148.0	155.0	125.0	128.5	14.3x7.2	16.7

接受客户定做/Custom versions available upon request
未经通知可以自行调整参数/All data are subject to modification without prior notice

中策亿特电子有限公司 ZHONGCE E.T ELECTRONICS CO.,LTD.
TEL: 0086-574-88156789, FAX: 0086-574-88156799, www.zcet.cn

LAMINATED TRANSFORMERS　　EI型叠片式变压器(EP系列)

Low Frequency, Epoxy Encapsulated, PC Plug-In Series

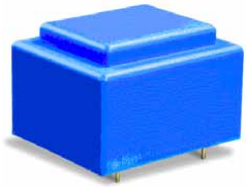

特性 General Specification:

- 功率 Power—0.5VA, 1.0VA,1.2VA,1.5VA
- 绝缘强度 Dielectric Strength—4000VRMS Hipot
- 初级 Primary—115V, 230V, 2X115V 50/60Hz
- 次级 Secondary—串联或并联式 Series or parallel secondaries
- 绝缘 Insulation—Class B（130℃）
- "X" —"A":115V; "B":230V; "C":2X115V

符合标准Agency Standards

- UL, compliant to UL 506 / UL5085-2.
- CSA, compliant to CSA 22.2 #66.2

机械结构 Mechanical

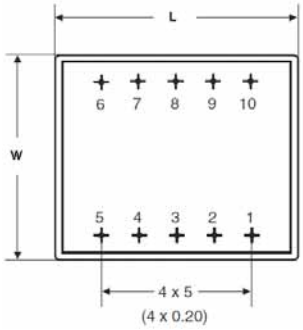

原理图 Schematics

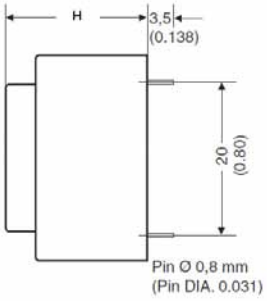

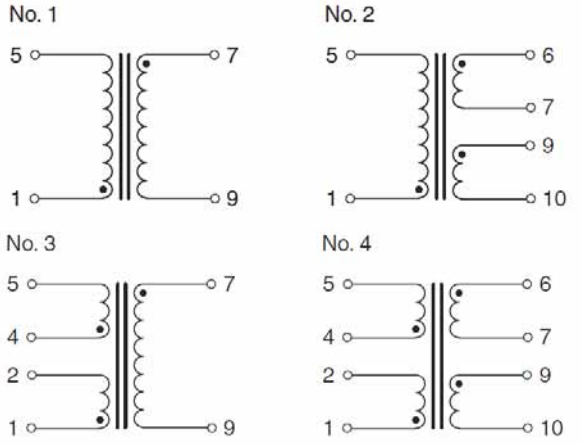

型　号 Part No.	功率 VA（Size）	空载 No-Load Voltage(V)	次级 Secondary (V/mA)
ETE-EP-0.5-6X	0.5	10.40	6/83
ETE-EP-0.5-9X	0.5	15.60	9/55
ETE-EP-0.5-12X	0.5	20.80	12/42
ETE-EP-0.5-15X	0.5	25.40	15/33
ETE-EP-0.5-18X	0.5	29.50	18/28
ETE-EP-0.5-24X	0.5	38.10	24/20
ETE-EP-0.5-D6X	0.5	2x10.60	2x6/42
ETE-EP-0.5-D9X	0.5	2x15.50	2x9/28
ETE-EP-0.5-D12X	0.5	2x19.70	2x12/20
ETE-EP-0.5-D15X	0.5	2x24.80	2x15/16
ETE-EP-0.5-D18X	0.5	2x29.80	2x18/13
ETE-EP-0.5-D24X	0.5	2x39.10	2x24/10
ETE-EP-1.0-6X	1.0	8.50	6/166
ETE-EP-1.0-9X	1.0	12.45	9/111
ETE-EP-1.0-12X	1.0	16.30	12/84
ETE-EP-1.0-15X	1.0	20.20	15/66
ETE-EP-1.0-18X	1.0	24.20	18/55
ETE-EP-1.0-24X	1.0	32.20	24/42
ETE-EP-1.0-D6X	1.0	2x8.30	2x6/84
ETE-EP-1.0-D9X	1.0	2x11.90	2x9/55
ETE-EP-1.0-D12X	1.0	2x16.20	2x12/42
ETE-EP-1.0-D15X	1.0	2x20.40	2x15/33
ETE-EP-1.0-D18X	1.0	2x24.20	2x18/28
ETE-EP-1.0-D24X	1.0	2x32.10	2x24/21
ETE-EP-1.2-6X	1.2	8.70	6/200
ETE-EP-1.2-9X	1.2	12.30	9/133
ETE-EP-1.2-12X	1.2	16.60	12/100
ETE-EP-1.2-15X	1.2	21.20	15/80
ETE-EP-1.2-18X	1.2	27.80	18/66
ETE-EP-1.2-24X	1.2	34.50	24/50
ETE-EP-1.2-D6X	1.2	2x8.70	2x6/100
ETE-EP-1.2-D9X	1.2	2x12.30	2x9/66
ETE-EP-1.2-D12X	1.2	2x16.60	2x12/50
ETE-EP-1.2-D15X	1.2	2x20.60	2x15/40
ETE-EP-1.2-D18X	1.2	2x25.80	2x18/33
ETE-EP-1.2-D24X	1.2	2x32.90	2x24/25
ETE-EP-1.5-6X	1.5	8.95	6/250
ETE-EP-1.5-9X	1.5	12.90	9/166
ETE-EP-1.5-12X	1.5	16.70	12/125
ETE-EP-1.5-15X	1.5	24.70	15/100
ETE-EP-1.5-18X	1.5	29.50	18/83
ETE-EP-1.5-24X	1.5	35.80	24/62
ETE-EP-1.5-D6X	1.5	2x9.15	2x6/125
ETE-EP-1.5-D9X	1.5	2x13.70	2x9/83
ETE-EP-1.5-D12X	1.5	2x17.30	2x12/62
ETE-EP-1.5-D15X	1.5	2x24.70	2x15/50
ETE-EP-1.5-D18X	1.5	2x29.40	2x18/41
ETE-EP-1.5-D24X	1.5	2x35.80	2x24/31

参考尺寸 Dimensions (mm)

VA (Size)	Wt. (kg.)	L	W	H
0.5	0.06	33.0	28.0	16.0
1.0	0.07	33.0	28.0	22.0
1.2	0.08	33.0	28.0	24.0
1.5	0.09	33.0	28.0	24.0

中策亿特电子有限公司 ZHONGCE E.T ELECTRONICS CO.,LTD.
TEL: 0086-574-88156789, FAX: 0086-574-88156799, www.zcet.cn

LAMINATED TRANSFORMERS　　EI型叠片式变压器(EP系列)

Low Frequency, Epoxy Encapsulated, PC Plug-In Series

特性 General Specification:

- 功率 Power—2.0VA,2.3VA,2.8VA
- 绝缘强度 Dielectric Strength—4000VRMS Hipot
- 初级 Primary—115V, 230V, 2X115V 50/60Hz
- 次级 Secondary—串联或并联式 Series or parallel secondaries
- 绝缘 Insulation—Class B（130℃）
- "X" —"A":115V; "B":230V; "C":2X115V

符合标准Agency Standards

- UL, compliant to UL 506 / UL5085-2.
- CSA, compliant to CSA 22.2 #66.2

机械结构 Mechanical　　原理图 Schematics

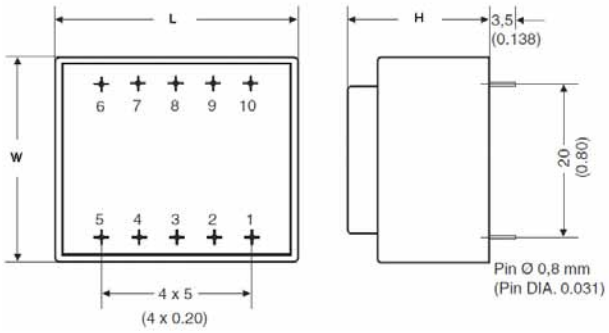

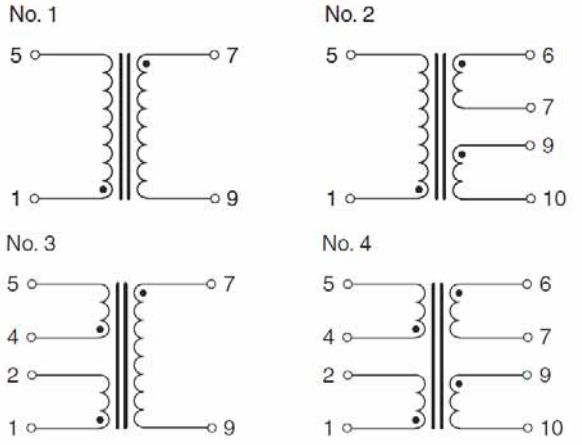

型　号 Part No.	功率 VA（Size）	空载 No-Load Voltage(V)	次级 Secondary (V/mA)
ETE-EP-2.0-6X	2.0	10.50	6/333
ETE-EP-2.0-9X	2.0	14.60	9/222
ETE-EP-2.0-12X	2.0	20.00	12/166
ETE-EP-2.0-15X	2.0	26.00	15/133
ETE-EP-2.0-18X	2.0	29.60	18/111
ETE-EP-2.0-24X	2.0	37.20	24/83
ETE-EP-2.0-D6X	2.0	2x8.70	2x6/166
ETE-EP-2.0-D9X	2.0	2x14.60	2x9/111
ETE-EP-2.0-D12X	2.0	2x19.45	2x12/83
ETE-EP-2.0-D15X	2.0	2x24.10	2x15/66
ETE-EP-2.0-D18X	2.0	2x29.10	2x18/55
ETE-EP-2.0-D24X	2.0	2x36.50	2x24/42
ETE-EP-2.3-6X	2.3	10.00	6/384
ETE-EP-2.3-9X	2.3	13.80	9/256
ETE-EP-2.3-12X	2.3	18.60	12/192
ETE-EP-2.3-15X	2.3	23.80	15/154
ETE-EP-2.3-18X	2.3	27.80	18/128
ETE-EP-2.3-24X	2.3	34.70	24/96
ETE-EP-2.3-D6X	2.3	2x9.90	2x6/192
ETE-EP-2.3-D9X	2.3	2x14.00	2x9/128
ETE-EP-2.3-D12X	2.3	2x17.50	2x12/96
ETE-EP-2.3-D15X	2.3	2x24.40	2x15/77
ETE-EP-2.3-D18X	2.3	2x29.30	2x18/64
ETE-EP-2.3-D24X	2.3	2x35.80	2x24/48
ETE-EP-2.8-6X	2.8	10.70	6/466
ETE-EP-2.8-9X	2.8	14.80	9/311
ETE-EP-2.8-12X	2.8	20.80	12/233
ETE-EP-2.8-15X	2.8	24.00	15/186
ETE-EP-2.8-18X	2.8	29.90	18/155
ETE-EP-2.8-24X	2.8	38.80	24/116
ETE-EP-2.8-D6X	2.8	2x10.70	2x6/233
ETE-EP-2.8-D9X	2.8	2x16.00	2x9/155
ETE-EP-2.8-D12X	2.8	2x20.40	2x12/116
ETE-EP-2.8-D15X	2.8	2x25.00	2x15/93
ETE-EP-2.8-D18X	2.8	2x30.50	2x18/77
ETE-EP-2.8-D24X	2.8	2x38.70	2x24/58

参考尺寸 Dimensions (mm)

VA (Size)	Wt. (kg.)	L	W	H
2.0	0.100	33.0	28.0	27.0
2.3	0.112	33.0	28.0	29.5
2.8	0.134	33.0	28.0	34.0

中策亿特电子有限公司 ZHONGCE E.T ELECTRONICS CO.,LTD.
TEL: 0086-574-88156789, FAX: 0086-574-88156799, www.zcet.cn

LAMINATED TRANSFORMERS　　EI型叠片式变压器(EP系列)

Low Frequency, Epoxy Encapsulated, PC Plug-In Series

RoHS 2002/95/EC

特性 **General Specification:**

- 功率 Power—10.0VA,12.0VA,16.0VA
- 绝缘强度 Dielectric Strength—4000VRMS Hipot
- 初级 Primary—115V, 230V, 2X115V 50/60Hz
- 次级 Secondary—串联或并联式 Series or parallel secondaries
- 绝缘 Insulation—Class B（130℃）
- “X”—“A”:115V; “B”:230V; “C”:2X115V

符合标准**Agency Standards**

- UL, compliant to UL 506 / UL5085-2.
- CSA, compliant to CSA 22.2 #66.2

机械结构 **Mechanical**　　原理图 **Schematics**

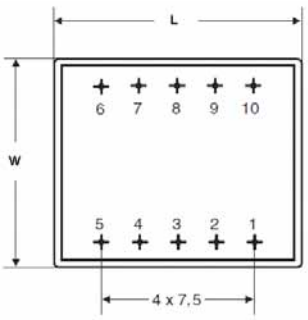

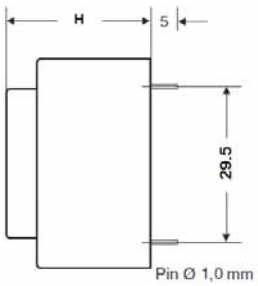

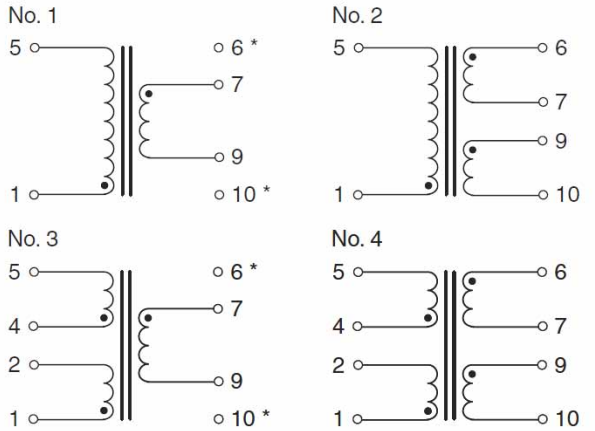

* Empty-Pin

型　号 Part No.	功率 VA（Size）	空载 No-Load Voltage(V)	次级 Secondary (V/mA)
ETE-EP-10-6X	10.0	7.90	6/1666
ETE-EP-10-9X	10.0	12.00	9/1111
ETE-EP-10-12X	10.0	15.70	12/834
ETE-EP-10-15X	10.0	19.20	15/666
ETE-EP-10-18X	10.0	22.90	18/555
ETE-EP-10-24X	10.0	30.60	24/416
ETE-EP-10-D6X	10.0	2x8.10	2x6/834
ETE-EP-10-D9X	10.0	2x11.60	2x9/555
ETE-EP-10-D12X	10.0	2x15.70	2x12/416
ETE-EP-10-D15X	10.0	2x19.50	2x15/333
ETE-EP-10-D18X	10.0	2x23.50	2x18/277
ETE-EP-10-D24X	10.0	2x30.00	2x24/208
ETE-EP-12-6X	12.0	7.70	6/2000
ETE-EP-12-9X	12.0	11.60	9/1333
ETE-EP-12-12X	12.0	15.30	12/1000
ETE-EP-12-15X	12.0	18.80	15/800
ETE-EP-12-18X	12.0	22.60	18/666
ETE-EP-12-24X	12.0	30.10	24/500
ETE-EP-12-D6X	12.0	2x7.90	2x6/1000
ETE-EP-12-D9X	12.0	2x11.50	2x9/666
ETE-EP-12-D12X	12.0	2x15.30	2x12/500
ETE-EP-12-D15X	12.0	2x19.10	2x15/400
ETE-EP-12-D18X	12.0	2x22.90	2x18/333
ETE-EP-12-D24X	12.0	2x29.50	2x24/250
ETE-EP-16-6X	16.0	7.60	6/2666
ETE-EP-16-9X	16.0	11.30	9/1777
ETE-EP-16-12X	16.0	14.90	12/1333
ETE-EP-16-15X	16.0	18.40	15/1066
ETE-EP-16-18X	16.0	22.40	18/888
ETE-EP-16-24X	16.0	29.60	24/666
ETE-EP-16-D6X	16.0	2x7.70	2x6/1333
ETE-EP-16-D9X	16.0	2x11.40	2x9/888
ETE-EP-16-D12X	16.0	2x15.00	2x12/666
ETE-EP-16-D15X	16.0	2x18.70	2x15/533
ETE-EP-16-D18X	16.0	2x22.40	2x18/444
ETE-EP-16-D24X	16.0	2x29.00	2x24/333

参考尺寸 **Dimensions (mm)**

VA (Size)	Wt. (kg.)	L	W	H
10.0	0.200	52.0	44.0	35.5
12.0	0.300	52.0	44.0	40.5
16.0	0.400	52.0	44.0	45.5

中策亿特电子有限公司 ZHONGCE E.T ELECTRONICS CO.,LTD.
TEL: 0086-574-88156789, FAX: 0086-574-88156799, www.zcet.cn

LAMINATED TRANSFORMERS　　EI型叠片式变压器(EP系列)

Low Frequency, Epoxy Encapsulated, PC Plug-In Series

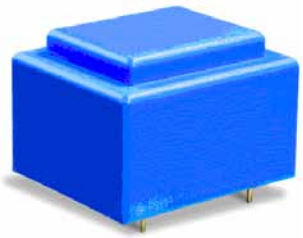

特性 General Specification:

- 功率 Power—3.2VA,4.0VA,5.0VA
- 绝缘强度 Dielectric Strength—4000VRMS Hipot
- 初级 Primary—115V, 230V, 2X115V 50/60Hz
- 次级 Secondary—串联或并联式 Series or parallel secondaries
- 绝缘 Insulation—Class B（130℃）
- "X"—"A":115V; "B":230V; "C":2X115V

符合标准Agency Standards

- UL, compliant to UL 506 / UL5085-2.
- CSA, compliant to CSA 22.2 #66.2

机械结构 Mechanical　　原理图 Schematics

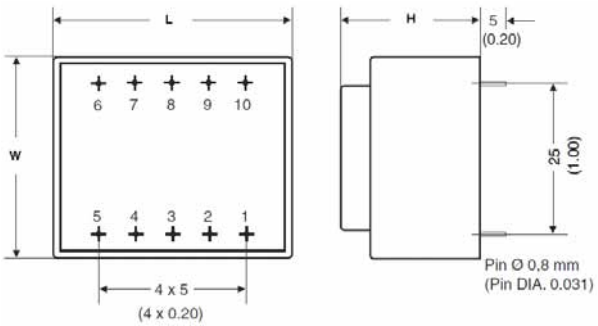

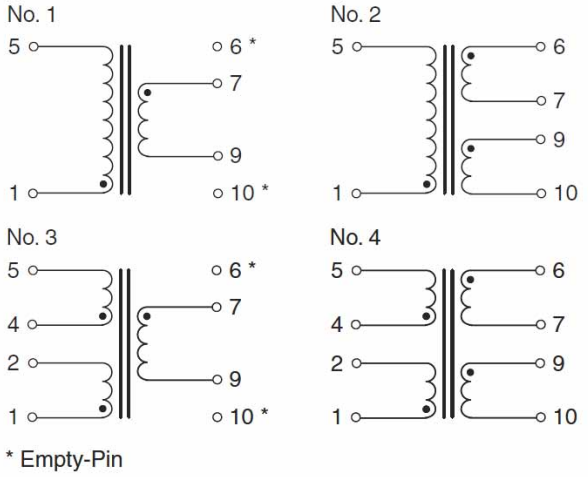

型　号 Part No.	功率 VA（Size）	空载 No-Load Voltage(V)	次级 Secondary (V/mA)
ETE-EP-3.2-6X	3.2	9.20	6/534
ETE-EP-3.2-9X	3.2	13.95	9/356
ETE-EP-3.2-12X	3.2	17.80	12/267
ETE-EP-3.2-15X	3.2	22.20	15/214
ETE-EP-3.2-18X	3.2	27.00	18/178
ETE-EP-3.2-24X	3.2	35.00	24/134
ETE-EP-3.2-D6X	3.2	2x8.90	2x6/267
ETE-EP-3.2-D9X	3.2	2x13.40	2x9/178
ETE-EP-3.2-D12X	3.2	2x17.50	2x12/134
ETE-EP-3.2-D15X	3.2	2x22.30	2x15/107
ETE-EP-3.2-D18X	3.2	2x25.80	2x18/89
ETE-EP-3.2-D24X	3.2	2x35.90	2x24/67
ETE-EP-4.0-6X	4.0	8.50	6/667
ETE-EP-4.0-9X	4.0	12.60	9/444
ETE-EP-4.0-12X	4.0	16.40	12/333
ETE-EP-4.0-15X	4.0	20.90	15/267
ETE-EP-4.0-18X	4.0	24.30	18/222
ETE-EP-4.0-24X	4.0	32.80	24/167
ETE-EP-4.0-D6X	4.0	2x8.50	2x6/333
ETE-EP-4.0-D9X	4.0	2x12.50	2x9/222
ETE-EP-4.0-D12X	4.0	2x16.40	2x12/167
ETE-EP-4.0-D15X	4.0	2x21.20	2x15/133
ETE-EP-4.0-D18X	4.0	2x24.50	2x18/111
ETE-EP-4.0-D24X	4.0	2x32.70	2x24/83
ETE-EP-5.0-6X	5.0	8.10	6/834
ETE-EP-5.0-9X	5.0	12.00	9/556
ETE-EP-5.0-12X	5.0	15.50	12/417
ETE-EP-5.0-15X	5.0	19.20	15/334
ETE-EP-5.0-18X	5.0	23.00	18/278
ETE-EP-5.0-24X	5.0	30.50	24/208
ETE-EP-5.0-D6X	5.0	2x7.70	2x6/417
ETE-EP-5.0-D9X	5.0	2x11.60	2x9/278
ETE-EP-5.0-D12X	5.0	2x15.20	2x12/208
ETE-EP-5.0-D15X	5.0	2x19.40	2x15/167
ETE-EP-5.0-D18X	5.0	2x23.10	2x18/139
ETE-EP-5.0-D24X	5.0	2x30.80	2x24/104

参考尺寸 Dimensions (mm)

VA (Size)	Wt. (kg.)	L	W	H
3.2	0.155	43.0	36.0	29.0
4.0	0.155	43.0	36.0	29.0
5.0	0.200	43.0	36.0	35.0

中策亿特电子有限公司 ZHONGCE E.T ELECTRONICS CO.,LTD.
TEL: 0086-574-88156789, FAX: 0086-574-88156799, www.zcet.cn

LAMINATED TRANSFORMERS　　EI型叠片式变压器(HPI系列)

High Power International Transformers
Greater Performance in Less Space and Weight

RoHS 2002/95/EC

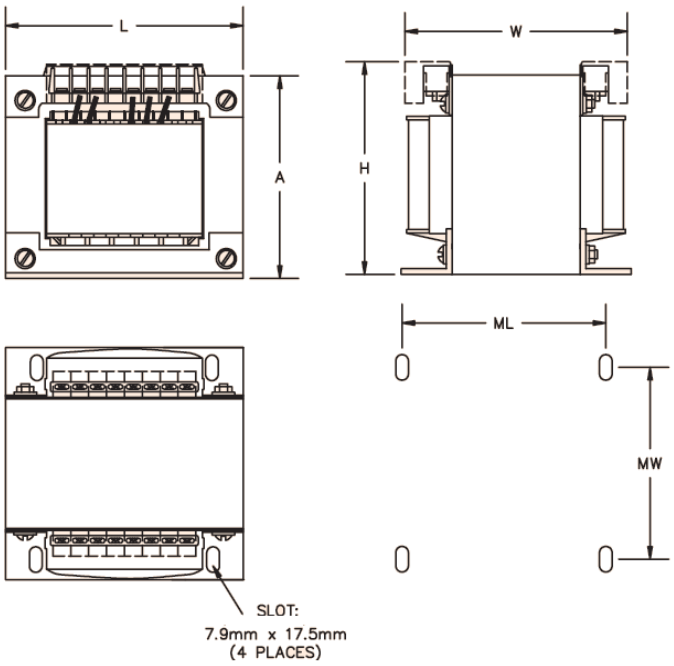

特性 General Specification:

- 功率 Power—1250, 1500, 1750, 2000, 2750 and 3500VA
- 绝缘强度 Dielectric Strength—1500VRMS Hipot
- 初级 Primary—100V, 115V, 215V, 230V 50/60Hz
- 次级 Secondary—115V/230V
- 端子 Terminals—Solder lug or quick-connect
- 绝缘 Insulation—Class H （180℃）
- 阻燃等级 Flammability Rating—UL94-V0

符合标准Agency Standards

- UL, compliant to UL506/UL5085-2
- CSA, compliant to CSA 22.2 #66.

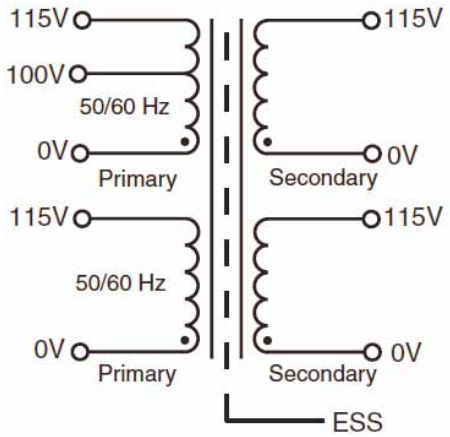

型　号 Part No.	功率 VA （Size）	次级额定值 Secondary RMS	
		串联 Series	并联 Parallel
HPI-1250	1250	230V@5.4A	115V@10.9A
HPI-1500	1500	230V@6.5A	115V@13.0A
HPI-1750	1750	230V@7.6A	115V@15.2A
HPI-2000	2000	230V@8.7A	115V@17.4A
HPI-2750	2750	230V@12.0A	115V@24.0A
HPI-3500	3500	230V@15.2A	115V@30.4A

Mechanical Dimension Table/外形尺寸表

型　号 Part No.	L	W	H	A	ML	MW	Weight
	mm						Kg
HPI-1250	**193.0**	**130.0**	**170.0**	**162.0**	**145.0**	**85.0**	**16.5**
HPI-1500	**193.0**	**145.0**	**170.0**	**162.0**	**145.0**	**100.0**	**19.0**
HPI-1750	**193.0**	**145.0**	**170.0**	**162.0**	**145.0**	**100.0**	**21.5**
HPI-2000	**193.0**	**155.0**	**170.0**	**162.0**	**145.0**	**110.0**	**23.5**
HPI-2750	**193.0**	**170.0**	**170.0**	**162.0**	**145.0**	**125.0**	**29.1**
HPI-3500	**193.0**	**200.0**	**170.0**	**162.0**	**145.0**	**155.0**	**38.3**

接受客户定做/Custom versions available upon request
未经通知可以自行调整参数/All data are subject to modification without prior notice

中策亿特电子有限公司 ZHONGCE E.T ELECTRONICS CO.,LTD.
TEL: 0086-574-88156789, FAX: 0086-574-88156799, www.zcet.cn

TOROIDAL TRANSFORMERS 环形变压器(TDB-C系列)

Low Frequency, Single-phase
North American Safety Standards

RoHS 2002/95/EC

特性 General Specification:

- 功率 Power—20VA to 300VA
- 绝缘强度 Dielectric Strength—4000VRMS Hipot
- 初级 Primary—120V-60Hz
- 次级 Secondary—常用次级电压 Many popular secondary voltage
- 绝缘 Insulation—Class B（130℃）
- 防护等级 Degree of protection—IP00
- 引出线 Lead wire—9.84”(250mm)
- 提供安装件 Supplied with mounting hardware set：
  螺栓，螺母，压盖和 2 块胶垫 screw, nut, top plate and 2rubber pads.

符合标准Agency Standards

- UL, compliant to UL 1411, File # E248268
- CUL, compliant to CSA 22.2 #1-94.

型 号 Part No.	功率 VA （Size）	Voltage Sec.(V)	Current Sec.(A)
TDB-C020-2006	20	2x6	2x1.67
TDB-C050-2006	50	2x6	2x4.17
TDB-C080-2006	80	2x6	2x6.67
TDB-C020-2010	20	2x10	2x1.0
TDB-C050-2010	50	2x10	2x2.5
TDB-C080-2010	80	2x10	2x4.0
TDB-C120-2010	120	2x10	2x6.0
TDB-C020-1011	20	11.5	1.74
TDB-C050-1011	50	11.5	4.35
TDB-C080-1011	80	11.5	6.96
TDB-C100-1011	100	11.5	8.70
TDB-C020-2012	20	2x12	2x0.83
TDB-C050-2012	50	2x12	2x2.08
TDB-C080-2012	80	2x12	2x3.33
TDB-C120-2012	120	2x12	2x5.00
TDB-C160-2012	160	2x12	2x6.67
TDB-C020-2015	20	2x15	2x0.67
TDB-C050-2015	50	2x15	2x1.67
TDB-C080-2015	80	2x15	2x2.67
TDB-C120-2015	120	2x15	2x4.00
TDB-C160-2015	160	2x15	2x5.33
TDB-C200-2015	200	2x15	2x6.67
TDB-C020-2018	20	2x18	2x0.56
TDB-C050-2018	50	2x18	2x1.39
TDB-C080-2018	80	2x18	2x2.22
TDB-C120-2018	120	2x18	2x3.33
TDB-C160-2018	160	2x18	2x4.44
TDB-C200-2018	200	2x18	2x5.55
TDB-C250-2018	250	2x18	2x6.94
TDB-C300-2018	300	2x18	2x8.33
TDB-C050-2022	50	2x22	2x1.14
TDB-C080-2022	80	2x22	2x1.82
TDB-C120-2022	120	2x22	2x2.73
TDB-C160-2022	160	2x22	2x3.64
TDB-C200-2022	200	2x22	2x4.55
TDB-C250-2022	250	2x22	2x5.68
TDB-C300-2022	300	2x22	2x6.82
TDB-C020-2024	20	2x24	2x0.42
TDB-C050-2024	50	2x24	2x1.04
TDB-C080-2024	80	2x24	2x1.67
TDB-C120-2024	120	2x24	2x2.50
TDB-C160-2024	160	2x24	2x3.33
TDB-C200-2024	200	2x24	2x4.17
TDB-C250-2024	250	2x24	2x5.21
TDB-C300-2024	300	2x24	2x6.25

机械结构 Mechanical

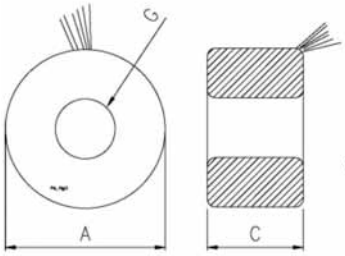

原理图 Schematics

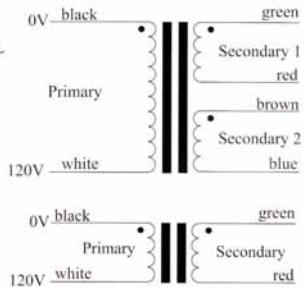

参考尺寸 Dimensions

型 号 Part No.	功率 Power (VA)	铜损 Cu-loss (W)	铁损 Fe-loss (W)	外径Ø ext A(mm)	内径Ø inner G(mm)	高 Height C(mm)	重量 Weight (Kg)
TDB-C020	20	3.2	0.7	71	28	25	0.42
TDB-C050	50	8.1	0.9	81	28	32	0.8
TDB-C080	80	12.2	1.0	90	30	34	1.0
TDB-C100	100	13.9	1.2	95	30	35	1.2
TDB-C120	120	14.9	1.5	95	32	38	1.3
TDB-C160	160	17.8	1.8	95	30	44	1.5
TDB-C200	200	20.5	2.3	102	36	48	1.8
TDB-C250	250	23.7	2.6	102	35	54	2.1
TDB-C300	300	28.7	2.9	105	33	61	2.3

中策亿特电子有限公司 ZHONGCE E.T ELECTRONICS CO., LTD.
TEL: 0086-574-88156789, FAX: 0086-574-88156799, www.zcet.cn

STANDARD DESIGN TOROIDAL TRANSFORMERS

INTERNATIONAL PRIMARIES 2X117V 50/60Hz

特性 General Specification:

- 功率 Power—100VA to 2000VA
- 绝缘强度 Dielectric Strength—4000VRMS Hipot
- 次级 Secondary—常用次级电压 Many popular secondary voltage
- 绝缘 Insulation—Class B（130℃）
- 防护等级 Degree of protection—IP00
- 提供安装件 Supplied with mounting hardware set：
  螺栓，螺母，压盖和 2 块胶垫 screw, nut, top plate and 2rubber pads.

符合标准Agency Standards:

- UL, compliant to UL 506 / UL5085-2,
- CUL, compliant to CSA 22.2 #66.2

原理图 Schematics

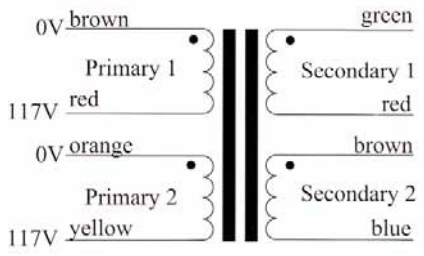

型 号 Part No.	功率 VA （Size）	尺寸 Dimensions(mm) A	C	重量 Weight	推荐紧固件尺寸 Recommended
TDB-C0100-2117	100	105	35	1.3	Φ8
TDB-C0150-2117	150	116	42	2.0	Φ8
TDB-C0200-2117	200	120	48	2.4	Φ8
TDB-C0250-2117	250	127	50	2.9	Φ8
TDB-C0300-2117	300	128	55	3.2	Φ8
TDB-C0400-2117	400	133	70	4.7	Φ8
TDB-C0500-2117	500	140	72	5.5	Φ8
TDB-C0600-2117	600	155	72	6.7	Φ8
TDB-C0800-2117	800	170	72	8.2	Φ8
TDB-C1000-2117	1000	180	78	10.0	Φ8
TDB-C1200-2117	1200	198	80	13.4	Φ8
TDB-C1600-2117	1600	210	86	16.0	Φ8
TDB-C2000-2117	2000	232	90	20.0	Φ8

安装方式 Mounting Methods

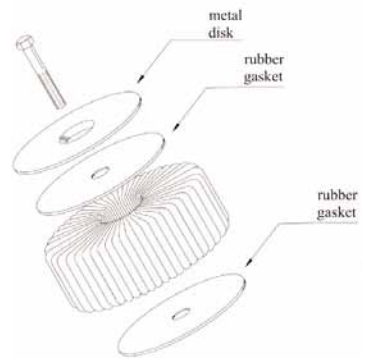

Up to 1500VA

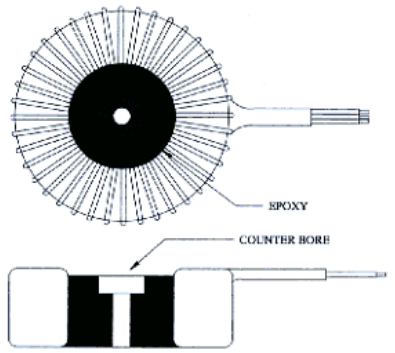

All sizes

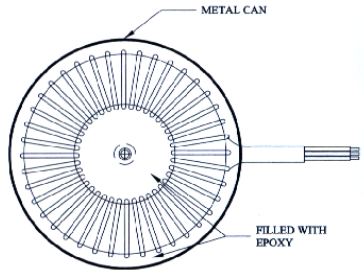

Up to 1000VA

接受客户定做/Custom versions available upon request
未经通知可以自行调整参数/All data are subject to modification without prior notice

MEDICAL GRADE HIGH ISOLATION TOROIDAL TRANSFORMERS

QUAD PRIMARIES 100V, 120V, 220V, 240V - 50/60Hz

特性 General Specification:

- 功率 Power—100VA to 10000VA
- 绝缘强度 Dielectric Strength—4000VRMS Hipot
- 初级 Primary—初级必须是串联或并联 Multiple primaries must be connected
- 次级 Secondary—常用次级电压 Many popular secondary voltage
- 绝缘 Insulation—Class B（130℃）
- 防护等级 Degree of protection—IP00

符合标准Agency Standards

- UL, compliant to UL 506 / UL5085-2,
- CUL, compliant to CSA 22.2 #66.2

原理图 Schematics

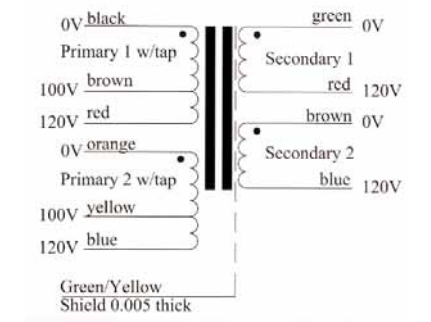

型 号 Part No.	功率 VA （Size）	Secondary Current at 120V	Secondary Current at 240V	尺寸 Dimensions(mm)		重量 Weight (Kg)
				A	C	
TDB-C0100SS	100	0.83A		102	51	1.2
TDB-C0100DS	100	0.83	0.42A	102	51	1.2
TDB-C0230SS	230	1.92A		117	61	2.4
TDB-C0230DS	230	1.92A	0.96A	117	61	2.4
TDB-C0400SS	400	3.33A		140	64	3.6
TDB-C0400DS	400	3.33A	1.67A	140	64	3.6
TDB-C0600SS	600	5.00A		157	79	5.9
TDB-C0600DS	600	5.00A	2.50A	157	79	5.9
TDB-C0750SS	750	6.25A		168	79	6.4
TDB-C0750DS	750	6.25A	3.12A	168	79	6.4
TDB-C1000DS	1000	8.33A	4.16A	175	89	9.1
TDB-C1500DS	1500	12.5A	6.25A	208	102	12.7
TDB-C2000DS	2000	16.6A	8.33A	231	112	15.9
TDB-C2500DS	2500	20.8A	10.4A	239	114	17.7
TDB-C3000DS	3000	25.0A	12.5A	254	109	21.3
TDB-C3750DS	3750	31.2A	15.6A	267	124	29.5
TDB-C5000DS	5000	41.6A	20.8A	295	137	35.4
TDB-C6250DS	6250	52.0A	26.0A	305	143	40.8
TDB-C7500DS	7500	62.5A	31.2A	305	140	45.4
TDB-C8750DS	8750	72.9A	36.4A	318	140	49.9
TDB-C10000DS	10000	83.3A	41.6A	330	132	54.4

注意：型号后面带SS表示只有一个次级输出 *NOTE:* (suffix)SS=(Single Secondary)Secondary 1 only.
型号后面带DS表示有两个次输出 (suffix)DS=(Dual Secondary)Secondary 1 & 2.
额定功率在1000VA以下的配带金属压盖和绝缘胶垫 Units rated below 1000VA come with metal dist and insulating pads
额定功率在1000VA或更大用环氧灌封并且中心开孔 Units rated 1000VA and larger are center potted

接受客户定做/Custom versions available upon request
未经通知可以自行调整参数/All data are subject to modification without prior notice

TOROIDAL TRANSFORMERS FOR AUTOMATIC GATE

PRIMARY 110V, 120V, 230V, 260V - 50/60Hz

特性 General Specification:

- 功率 Power—50VA, 75VA, 96VA
- 损耗 No-Load Power—P_0<2.0W
- 绝缘强度 Dielectric Strength—4000VRMS Hipot
- 初级 Primary—单组输入 Single Primary
- 次级 Secondary—常用次级电压 Many popular secondary voltage
- 绝缘 Insulation—Class B（130℃）
- 防护等级 Degree of protection—IP00

符合标准Agency Standards

- UL, compliant to UL 506 / UL5085-2,
- CUL, compliant to CSA 22.2 #66.2
- TUV EN61558-2-6

原理图 Schematics

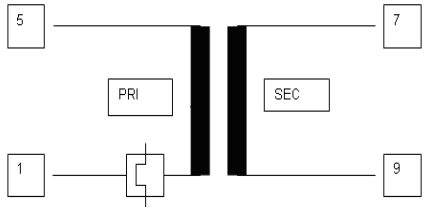

型 号 Model	编 号 Series No.	功率VA（Size）	输入电压 Primary	输出空载电压 No-load Volts	输出工作电流 Operation Mode	重量 Weight (Kg)
TDB-C	TDB-C-230A7	50	230V	24.0V	>18.0V@7.0A	1.42
	TDB-C-260A7	50	260V			
	TDB-C-120A7	50	120V			
	TDB-C-110A7	50	110V			
	TDB-C-230A10	75	230V		>18.0V@10.0A	1.50
	TDB-C-260A10	75	260V			
	TDB-C-120A10	75	120V			
	TDB-C-110A10	75	110V			
	TDB-C-230A14	96	230V		>18.0V@14.0A	1.67
	TDB-C-260A14	96	260V			
	TDB-C-120A14	96	120V			
	TDB-C-110A14	96	110V			

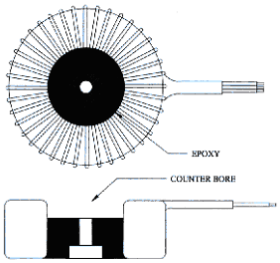

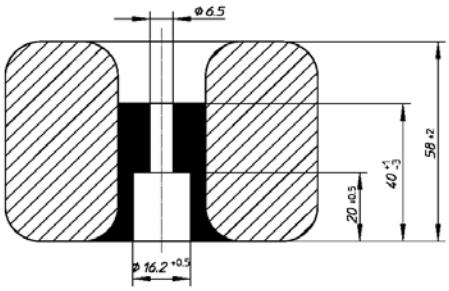

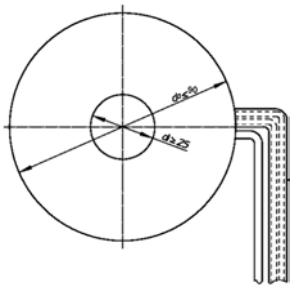

接受客户定做/Custom versions available upon request
未经通知可以自行调整参数/All data are subject to modification without prior notice

CONTROL TRANSFORMERS　　EI型24V电机变压器(OF系列)

Low Frequency, Open Frame, Class II transformers

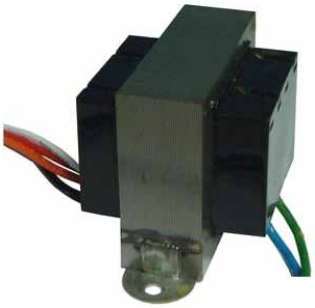

RoHS 2002/95/EC

特性 General Specification:

- 功率 Power—20VA,40VA,50VA,75VA
- 绝缘强度 Dielectric Strength—3500VRMS Hipot
- 初级 Primary—120/208V/240V/277V/480V 50/60Hz
- 次级 Secondary—2.5V/12V/24V
- 端子 Terminals—引线 Lead wire
- 绝缘 Insulation—Class B（130℃）

符合标准Agency Standards:

- UL, compliant to UL1585 / UL5085-3.
- CSA, compliant to CSA 22.2 #66.3
- CE, compliant to EN61558

型　号 Part No.	功率VA（Size）	输入电压 INPUT(VAC)	输出电压 OUTPUT(VAC)
2001OF	20	240	24
2011OF	20	120	24
2021OF	20	208/240	24
2031OF	20	120/208/240	24
20227OF	20	277	24
4001OF	40	240	24
4011OF	40	120	24
4021OF	40	208/240	24
4031OF	40	120/208/240	24
40277OF	40	277	24
40312OF-13	40	120/208/240	12/24
40313OF-11	40	120/208/240	2.5/12/24
5001OF	50	240	24
5011OF	50	120	24
5021OF	50	208/240	24
5031OF	50	120/208/240	24
50277OF	50	277	24
50312OF-13	50	120/208/240	12/24
50313OF-11	50	120/208/240	2.5/12/24
6001OF	60	240	24
6011OF	60	120	24
6021OF	60	208/240	24
6031OF	60	120/208/240	24
60277OF	60	277	24
60312OF-13	60	120/208/240	12/24
60313OF-11	60	120/208/240	2.5/12/24
7551OF-11	75	120	24
7551OF-13	75	240	24
7551OF-14	75	277	24
7551OF-15	75	480	24
7551OF-21	75	120/208	24
7551OF-25	75	208/240	24
7551OF-29	75	240/480	24
7551OF-210	75	277/480	24
7551OF-31	75	120/208/240	24
7551OF-38	75	208/240/480	24
7551OF-39	75	240/277/480	24
7551OF-42	75*	120/208/240/480	24
7551OF-43	75*	120/240/277/480	24
7551OF	75*	120/208/240/277/480	24

机械结构 Mechanical

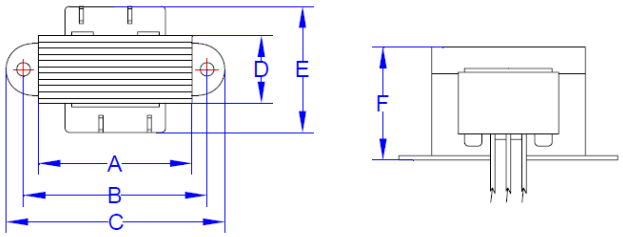

原理图 Schematics

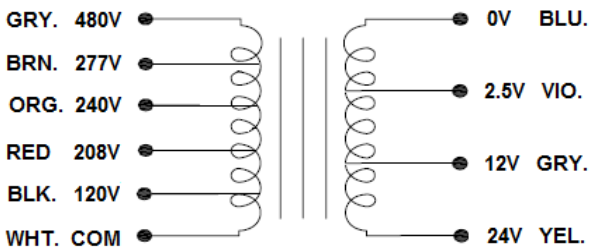

参考尺寸 Dimensions (mm)

VA(Size)	A	B	C	D	E	F	MTG.
20	57.5	80.0	90.0	23.0	50.0	50.0	Φ5.0
40	66.5	80.0	90.0	23.0	55.0	57.0	Φ5.0
50	76.5	90.0	102.0	26.0	68.0	66.0	Φ5.0
60	76.5	90.0	102.0	30.0	72.0	66.0	Φ5.0
75	76.5	90.0	102.0	30.0	72.0	66.0	Φ5.0
75*	76.5	90.0	102.0	39.0	81.0	66.0	Φ5.0

中策亿特电子有限公司 ZHONGCE E.T ELECTRONICS CO.,LTD.
TEL: 0086-574-88156789, FAX: 0086-574-88156799, www.zcet.cn

CONTROL TRANSFORMERS　　EI型24V电机变压器(OFC系列)

Low Frequency, Open Construction with Circuit Breaker, Class II transformers

RoHS 2002/95/EC

特性 General Specification:

- 功率 Power—50VA, 60VA, 75VA, 96VA
- 绝缘强度 Dielectric Strength—3500VRMS Hipot
- 初级 Primary—120/208V/240V/277V/480V 50/60Hz
- 次级 Secondary—24V
- 端子 Terminals—引线 Lead wire
- 绝缘 Insulation—Class B（130℃）
- “X”—May be one of input thru. four voltages

符合标准Agency Standards:

- UL, compliant to UL1585 / UL5085-3.
- CSA, compliant to CSA 22.2 #66.3
- CE, compliant to EN61558

机械结构 Mechanical

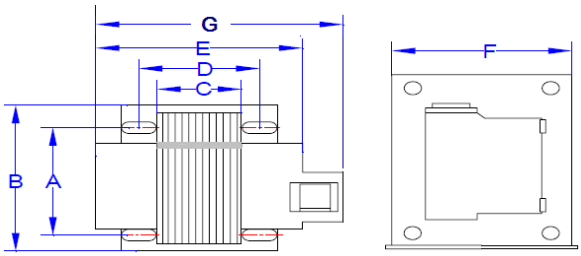

原理图 Schematics

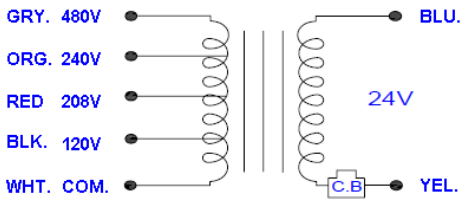

型　号 Part No.	功率 VA（Size）	输入电压 INPUT(VAC)	输出电压 OUTPUT(VAC)
5041OFC-X	50	120	24
	50	208	24
	50	240	24
	50	480	24
	50	120/208	24
	50	120/240	24
	50	208/240	24
	50	240/480	24
	50	120/208/240	24
	50	208/240/480	24
	50	120/208/240/480	24
6041OFC-X	60	120	24
	60	208	24
	60	240	24
	60	480	24
	60	120/208	24
	60	120/240	24
	60	208/240	24
	60	240/480	24
	60	120/208/240	24
	60	208/240/480	24
	60	120/208/240/480	24
7541OFC-X	75	120	24
	75	208	24
	75	240	24
	75	480	24
	75	120/208	24
	75	120/240	24
	75	208/240	24
	75	240/480	24
	75	120/208/240	24
	75	208/240/480	24
	75*	120/208/240/480	24
10041OFC-X	96	120	24
	96	208	24
	96	240	24
	96	480	24
	96	120/208	24
	96	120/240	24
	96	208/240	24
	96	240/480	24
	96	120/208/240	24
	96	208/240/480	24
	96	120/208/240/480	24

参考尺寸 Dimensions (mm)

VA(Size)	A	B	C	D	E	F	G	MTG.
50	50.8	68.0	26.0	51.5	67.0	65.0	85.0	5.0x15.0
60	50.8	68.0	30.0	51.5	71.0	65.0	85.0	5.0x15.0
75	50.8	68.0	30.0	51.5	71.0	65.0	85.0	5.0x15.0
75*	50.8	68.0	39.0	51.5	80.0	65.0	85.0	5.0x15.0
96	64.0	85.0	32.5	51.5	75.0	80.5	95.0	5.0x15.0

中策亿特电子有限公司 ZHONGCE E.T ELECTRONICS CO.,LTD.
TEL: 0086-574-88156789, FAX: 0086-574-88156799, www.zcet.cn

CONTROL TRANSFORMERS　　EI型24V电机变压器(OFC系列)

Low Frequency, Open Construction with Circuit Breaker, Class II transformers

RoHS 2002/95/EC

特性 General Specification:

- 功率 Power—50VA, 60VA, 75VA,
- 绝缘强度 Dielectric Strength—3500VRMS Hipot
- 初级 Primary—120/208V/240V/277V/480V 50/60Hz
- 次级 Secondary—24V
- 端子 Terminals—引线 Lead wire
- 绝缘 Insulation—Class B（130℃）
- “Y”—May be one of input thru. four voltages

符合标准Agency Standards:

- UL, compliant to UL1585 / UL5085-3.
- CSA, compliant to CSA 22.2 #66.3
- CE, compliant to EN61558

型　号 Part No.	功率 VA（Size）	输入电压 INPUT(VAC)	输出电压 OUTPUT(VAC)
5041OFC-Y	50	120	24
	50	208	24
	50	240	24
	50	480	24
	50	120/208	24
	50	120/240	24
	50	208/240	24
	50	240/480	24
	50	120/208/240	24
	50	208/240/480	24
	50	120/208/240/480	24
6041OFC-Y	60	120	24
	60	208	24
	60	240	24
	60	480	24
	60	120/208	24
	60	120/240	24
	60	208/240	24
	60	240/480	24
	60	120/208/240	24
	60	208/240/480	24
	60	120/208/240/480	24
7541OFC-Y	75	120	24
	75	208	24
	75	240	24
	75	480	24
	75	120/208	24
	75	120/240	24
	75	208/240	24
	75	240/480	24
	75	120/208/240	24
	75	208/240/480	24
	75*	120/208/240/480	24

机械结构 Mechanical

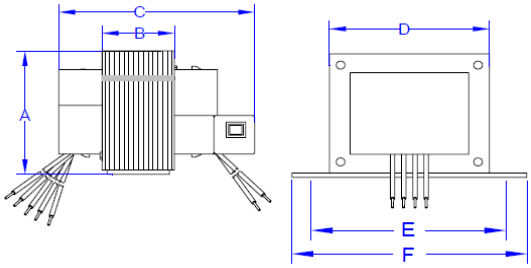

原理图 Schematics

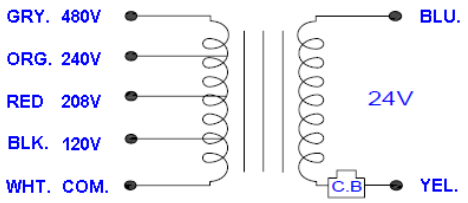

参考尺寸 Dimensions (mm)

VA(Size)	A	B	C	D	E	F	MTG.
50	65.0	26.0	85.0	77.0	90.0	102.0	Φ5.0
60	65.0	30.0	89.0	77.0	90.0	102.0	Φ5.0
75	65.0	30.0	89.0	77.0	90.0	102.0	Φ5.0
75*	65.0	39.0	98.0	77.0	90.0	102.0	Φ5.0

中策亿特电子有限公司 ZHONGCE E.T ELECTRONICS CO.,LTD.
TEL: 0086-574-88156789, FAX: 0086-574-88156799, www.zcet.cn

CONTROL TRANSFORMERS　　EI型24V电机变压器(MT系列)

Low Frequency, Foot Mount, Terminal Output, Class II transformers

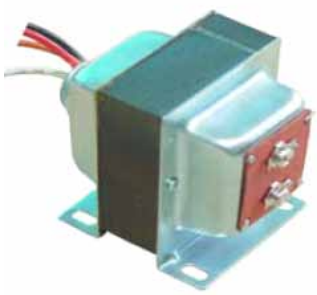

RoHS 2002/95/EC

特性 General Specification:

- 功率 Power—20VA,40VA,50VA,60VA,75VA
- 绝缘强度 Dielectric Strength—3500VRMS Hipot
- 初级 Primary—120/208V/240V/277V 50/60Hz
- 次级 Secondary—24V
- 端子 Terminals—次级端子引出 Secondary connect with screw terminal
- 绝缘 Insulation—Class B（130℃）

符合标准Agency Standards:

- UL, compliant to UL1585 / UL5085-3.
- CSA, compliant to CSA 22.2 #66.3
- CE, compliant to EN61558

机械结构 Mechanical

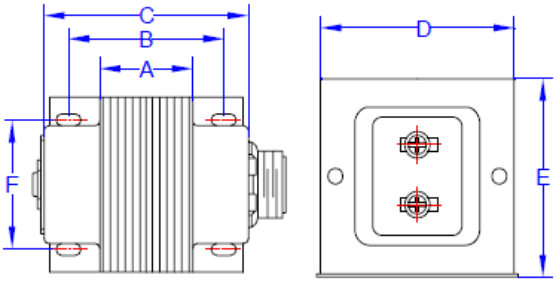

原理图 Schematics

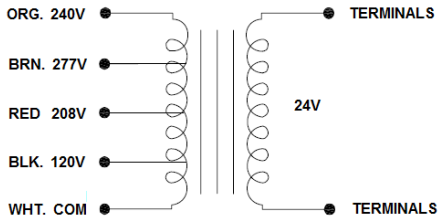

型　号 Part No.	功率 VA（Size）	输入电压 INPUT(VAC)	输出电压 OUTPUT(VAC)
2001MT	20	240	24
2011MT	20	120	24
2021MT	20	208/240	24
2031MT	20	120/208/240	24
20227MT	20	277	24
4001MT	40	240	24
4011MT	40	120	24
4021MT	40	208/240	24
4031MT	40	120/208/240	24
40277MT	40	277	24
5001MT	50	240	24
5011MT	50	120	24
5021MT	50	208/240	24
5031MT	50	120/208/240	24
50277MT	50	277	24
6001MT	60	240	24
6011MT	60	120	24
6021MT	60	208/240	24
6031MT	60	120/208/240	24
60277MT	60	277	24
7501MT	75	240	24
7511MT	75	120	24
7521MT	75	208/240	24
7531MT	75	120/208/240	24
75277MT	75	277	24

参考尺寸 Dimensions (mm)

VA(Size)	A	B	C	D	E	F	MTG.
20	25.0	45.0	62.0	48.0	61.0	38.0	4.1x7.5
40	25.0	45.0	64.0	56.0	75.0	45.0	4.3x7.5
50	28.0	43.0	71.0	64.0	77.0	50.8	4.3x9.5
60	32.0	43.0	75.0	64.0	77.0	50.8	4.3x9.5
75	32.0	43.0	75.0	64.0	77.0	50.8	4.3x9.5

中策亿特电子有限公司 ZHONGCE E.T ELECTRONICS CO.,LTD.
TEL: 0086-574-88156789, FAX: 0086-574-88156799, www.zcet.cn

CONTROL TRANSFORMERS　　EI型24V电机变压器(MWCB系列)

Low Frequency, Foot Mount, Circuit Breaker, Class II transformers

特性 General Specification:

- 功率 Power—50VA,60VA,75VA,96VA
- 绝缘强度 Dielectric Strength—3500VRMS Hipot
- 初级 Primary—120/208V/240V/277V/480V 50/60Hz
- 次级 Secondary—24V
- 端子 Terminals—引线 Lead wire
- 绝缘 Insulation—Class B（130℃）
- “Y”—May be one of input thru. four voltages

符合标准Agency Standards:

- UL, compliant to UL1585 / UL5085-3.
- CSA, compliant to CSA 22.2 #66.3
- CE, compliant to EN61558

型号 Part No. (功率 VA)	输入电压 INPUT(VAC)	输出电压 OUTPUT(VAC)
5051MWCB-Y (50VA) & 6051MWCB-Y (60VA) & 7551MWCB-Y (75VA) & 10051MWCB-Y (96VA)	120	24
	208	24
	240	24
	277	24
	480	24
	120/208	24
	120/240	24
	120/277	24
	120/480	24
	208/240	24
	208/277	24
	208/480	24
	240/277	24
	240/480	24
	277/480	24
	120/208/240	24
	120/208/277	24
	120/240/277	24
	120/240/480	24
	120/277/480	24
	208/240/277	24
	208/240/480	24
	208/277/480	24
	240/277/480	24
	120/208/240/480	24
	120/240/277/480	24
	208/240/277/480	24
	120/208/240/277/480	24

机械结构 Mechanical

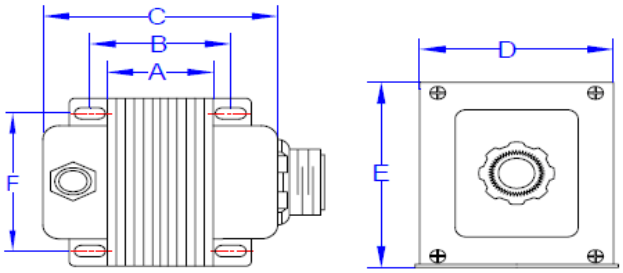

原理图 Schematics

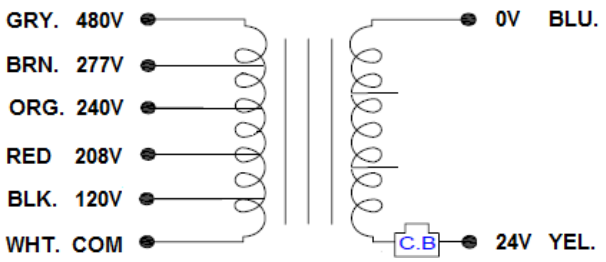

参考尺寸 Dimensions (mm)

VA(Size)	A	B	C	D	E	F	MTG.
50	28.0	43.0	84.0	64.0	78.0	50.8	4.3x8.5
60	32.0	47.0	88.0	64.0	78.0	50.8	4.3x8.5
75	32.0	47.0	88.0	64.0	78.0	50.8	4.3x8.5
75*	41.0	55.0	97.0	64.0	78.0	50.8	4.3x8.5
96	35.0	55.0	95.0	80.5	97.0	70.0	5.0x12.0

中策亿特电子有限公司 ZHONGCE E.T ELECTRONICS CO.,LTD.
TEL: 0086-574-88156789, FAX: 0086-574-88156799, www.zcet.cn

AUDIO TRANSFORMERS 音频变压器(AS, AH系列)

Speaker Impedance Matching Transformer Audio Transformer AS Series

型　号 Part No.	输入 I/P	功率 Power	频率响应 Freq. response	输出阻抗 O/P
ETE-AS2.5-25X	25V	2.5W,1.25W,0.625W	40Hz-16KHz±2dB	4,8,16Ω
ETE-AS2.5-70X	70V	2.5W,1.25W,0.625W	40Hz-16KHz±2dB	4,8,16Ω
ETE-AS2.5-100X	100V	2.5W,1.25W,0.625W	40Hz-16KHz±2dB	4,8,16Ω
ETE-AS6-25X	25V	6W,3W,1.5W	40Hz-16KHz±2dB	4,8,16Ω
ETE-AS6-70X	70V	6W,3W,1.5W	40Hz-16KHz±2dB	4,8,16Ω
ETE-AS6-100X	100V	6W,3W,1.5W	40Hz-16KHz±2dB	4,8,16Ω
ETE-AS16-25X	25V	16W,8W,4W	40Hz-16KHz±2dB	4,8,16Ω
ETE-AS16-70X	70V	16W,8W,4W	40Hz-16KHz±2dB	4,8,16Ω
ETE-AS16-100X	100V	16W,8W,4W	40Hz-16KHz±2dB	4,8,16Ω
ETE-AS30-25X	25V	30W,15W,7.5W	40Hz-16KHz±3dB	4,8,16Ω
ETE-AS30-70X	70V	30W,15W,7.5W	40Hz-16KHz±3dB	4,8,16Ω
ETE-AS30-100X	100V	30W,15W,7.5W	40Hz-16KHz±3dB	4,8,16Ω
ETE-AS60-25X	25V	60W,30W,15W	40Hz-16KHz±3dB	4,8,16Ω
ETE-AS60-70X	70V	60W,30W,15W	40Hz-16KHz±3dB	4,8,16Ω
ETE-AS60-100X	100V	60W,30W,15W	40Hz-16KHz±3dB	4,8,16Ω
ETE-AS120-25X	25V	120W,60W,30W	40Hz-16KHz±3dB	4,8,16Ω
ETE-AS120-70X	70V	120W,60W,30W	40Hz-16KHz±3dB	4,8,16Ω
ETE-AS120-100X	100V	120W,60W,30W	40Hz-16KHz±3dB	4,8,16Ω

特性 General Specification:

- ◆ 功率 Power—2.5W to 60W
- ◆ 绝缘强度 Dielectric Strength—1500VRMS Hipot
- ◆ 输入电压 Input Voltage—25V, 70V, 100V
- ◆ 输出阻抗 Output Impedance—4,8,16Ω
- ◆ 端子 Terminals—Solder lug or Lead wire
- ◆ 绝缘 Insulation—Class B（130℃）

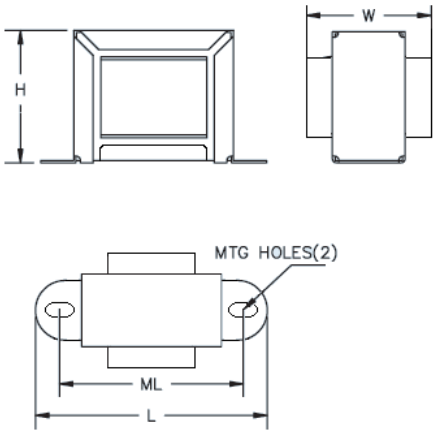

Mechanical Dimension Table/外形尺寸表(mm)

型　号 Part No.	长 L	宽 W	高 H	安装尺寸 ML	安装孔 MTG.
ETE-AS2.5	55	35	32	45.0	3.6x6.2
ETE-AS6	61	40	35	51.0	3.6x6.2
ETE-AS16	71	45	43	61.0	4.0x6.2
ETE-AS30	85	60	51	71.0	4.3x9.0
ETE-AS60	93	65	58	81.5	4.0x7.5
ETE-AS120	120	90	74	104.0	4.5x7.5

High-performance Impedance Matching Transformer Audio Transformer AH Series

特性 General Specification:

- ◆ 绝缘强度 Dielectric Strength—1500VRMS Hipot
- ◆ 频率特性 Frequency Characteristic—20Hz~20KHz±0.5Db
- ◆ 失真 Distortion—less than 0.5%
- ◆ 基准尺寸 Dimension(L x W x H)—34 x 30 x 30

型　号 Part No.	初级阻抗(Ω) Pri. Impedance	次级阻抗(Ω) Sec. Impedance
ETL-AH-6H2H	0-600	0-200
ETL-AH-6H6H	0-600	0-600
ETL-AH-6H6H2	0-600	2x0-600
ETL-AH-6H24H	0-600	0-2400
ETL-AH-6H60H	0-600	0-6000
ETL-AH-6H10K	0-600	0-10000
ETL-AH-6H15K	0-600	0-15000
ETL-AH-6H20K	0-600	0-20000
ETL-AH-1010K	0-10	0-10000
ETL-AH-1506H	0-150	0-600
ETL-AH-10K10K	0-10000	0-10000

接受客户定做/Custom versions available upon request
未经通知可以自行调整参数/All data are subject to modification without prior notice

中策亿特电子有限公司 ZHONGCE E.T ELECTRONICS CO.,LTD.
TEL: 0086-574-88156789, FAX: 0086-574-88156799, www.zcet.cn

LIGHTING TRANSFORMERS 低压照明变压器(ML系列)

Low Frequency, Epoxy Encapsulated, Transformer For 12V Lighting Installation, ML Series

特性 General Specification:

- 功率 Power—20VA to 400VA
- 绝缘强度 Dielectric Strength—4000VRMS Hipot
- 初级 Primary—230V
- 频率 Frequency—50/60Hz
- 次级 Secondary—11.5V
- 引出 Lead-out—引线或端子台 Lead wire or terminal block
- 环境温度 Ambient temp.(t)—40℃
- 结构等级 Construction class— II
- 绝缘 Insulation—Class B（130℃）
- 保护等级 Degree of protection—IP43

符合标准Agency Standards:

- EN61558-2-6

型 号 Part No.	功率 VA （Size）	Voltage Sec.(V)	Current Sec.(A)
ETE-ML020-1011	20	11.5	1.67
ETE-ML050-1011	50	11.5	4.17
ETE-ML105-1011	105	11.5	8.75
ETE-ML150-1011	150	11.5	12.50
ETE-ML200-1011	200	11.5	16.67
ETE-ML250-1011	250	11.5	20.83
ETE-ML300-1011	300	11.5	25.00
ETE-ML350-1011	350	11.5	29.17
ETE-ML400-1011	400	11.5	33.33
ETE-ML020-2011	20	2x11.5	0.83
ETE-ML050-2011	50	2x11.5	2.08
ETE-ML105-2011	105	2x11.5	4.37
ETE-ML150-2011	150	2x11.5	6.25
ETE-ML200-2011	200	2x11.5	8.33
ETE-ML250-2011	250	2x11.5	10.42
ETE-ML300-2011	300	2x11.5	12.50
ETE-ML350-2011	350	2x11.5	14.58
ETE-ML400-2011	400	2x11.5	16.67

机械结构 Mechanical

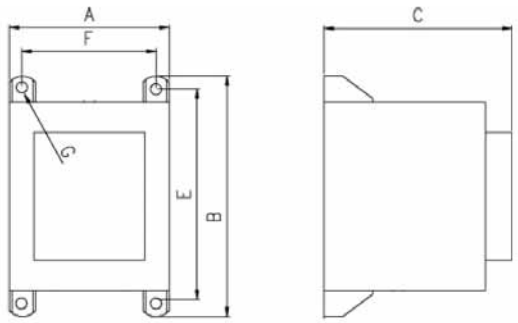

Wiring diagram

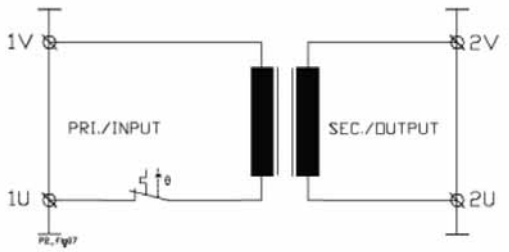

参考尺寸 Dimensions (mm)

VA (Size)	A	B	C	E	F	G
20	56.0	83.0	59.0	74.0	44.0	Φ4.5
50	62.5	91.0	70.0	82.0	51.5	Φ4.5
105	78.0	110.0	79.0	97.5	59.5	Φ5.0
150	78.0	110.0	79.0	97.5	59.5	Φ5.0
200	88.0	140.0	101.0	119.5	72.0	Φ5.7
250	88.0	140.0	101.0	119.5	72.0	Φ5.7
300	88.0	140.0	101.0	119.5	72.0	Φ5.7
350	105.0	158.0	120.0	141.0	89.0	Φ5.7
400	105.0	158.0	120.0	141.0	89.0	Φ5.7

接受客户定做/Custom versions available upon request
未经通知可以目行调整参数/All data are subject to modification without prior notice

中策亿特电子有限公司 ZHONGCE E.T ELECTRONICS CO.,LTD.
TEL: 0086-574-88156789, FAX: 0086-574-88156799, www.zcet.cn

LAMINATED TRANSFORMERS　　UI型叠片式变压器(LP系列)

Low Frequency, Open-Style Laminated, Low Profile, Plug-In Series

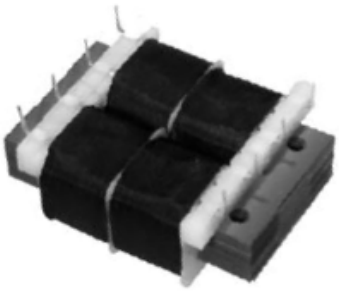

RoHS 2002/95/EC

特性 General Specification

- 功率 Power—2VA to 48VA
- 绝缘强度 Dielectric Strength—1500VRMS Hipot
- 初级 Primary—双组输入 Dual primaries(115/230V-50/60Hz)
- 次级 Secondary—串联或并联式 Series or parallel secondaries
- 端子 Terminals—印刷电路板安装 Printed circuit mount
- 绝缘 Insulation—Class B（130℃）
- 高度 Height— 0.65” to 1.40” (16.5 mm to 35.6 mm)

符合标准Agency Standards:

- UL, compliant to UL 506 / UL5085-2.
- CSA, compliant to CSA 22.2 #66.2

机械结构 Mechanical

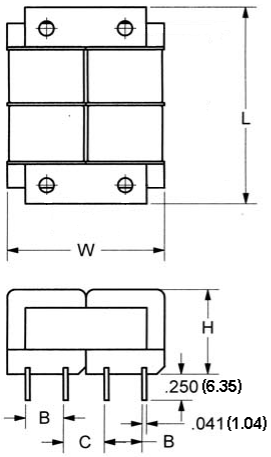

原理图 Schematics

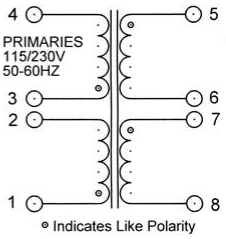

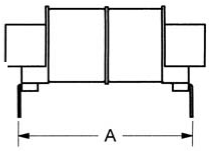

参考尺寸 Dimensions (mm)

VA (Size)	Wt. (kg.)	A	B	C	L	W	H	D
2	0.14	40.6	9.5	9.5	48	40	17	1.04X0.51
6	0.20	40.6	9.5	9.5	48	40	22	1.04X0.51
12	0.31	50.8	12.7	12.7	64	51	28	1.04X0.51
24	0.43	48.3	12.7	13.5	73	58	32	1.04SQ
48	0.60	55.4	15.2	16.8	80	64	35	1.04SQ

型　号 Part No.	功率 VA（Size）	次级额定值 Secondary RMS	
		串联 Series	并联 Parallel
ETE-LP-10-2	2	10VCT@250mA	5V@500mA
ETU-LP-10-6	6	10VCT@600mA	5V@1.2A
ETU-LP-10-12	12	10VCT@1.2A	5V@2.4A
ETU-LP-10-24	24	10VCT@2.4A	5V@4.8A
ETU-LP-10-48	48	10VCT@4.8A	5V@9.6A
ETU-LP-12.6-2	2	12.6VCT@200mA	6.3V@400mA
ETU-LP-12.6-6	6	12.6VCT@450mA	6.3V@900mA
ETU-LP-12.6-12	12	12.6VCT@950mA	6.3V@1.9A
ETU-LP-12.6-24	24	12.6VCT@1.9A	6.3V@3.8A
ETU-LP-12.6-48	48	12.6VCT@3.8A	6.3V@7.6A
ETU-LP-16-2	2	16VCT@150mA	8V@300mA
ETU-LP-16-6	6	16VCT@350mA	8V@700mA
ETU-LP-16-12	12	16VCT@750mA	8V@1.5A
ETU-LP-16-24	24	16VCT@1.5A	8V@3.0A
ETU-LP-16-48	48	16VCT@3.0A	8V@6.0A
ETU-LP-20-2	2	20VCT@125mA	10V@250mA
ETU-LP-20-6	6	20VCT@300mA	10V@600mA
ETU-LP-20-12	12	20VCT@600mA	10V@1.2A
ETU-LP-20-24	24	20VCT@1.2A	10V@2.4A
ETU-LP-20-48	48	20VCT@2.4A	10V@4.8A
ETU-LP-24-2	2	24VCT@100mA	12V@200mA
ETU-LP-24-6	6	24VCT@250mA	12V@500mA
ETU-LP-24-12	12	24VCT@500mA	12V@1.0A
ETU-LP-24-24	24	24VCT@1.0A	12V@2.0A
ETU-LP-24-48	48	24VCT@2.0A	12V@4.0A
ETU-LP-30-2	2	30VCT@85mA	15V@170mA
ETU-LP-30-6	6	30VCT@200mA	15V@400mA
ETU-LP-30-12	12	30VCT@400mA	15V@800mA
ETU-LP-30-24	24	30VCT@800mA	15V@1.6A
ETU-LP-30-48	48	30VCT@1.6A	15V@3.2A
ETU-LP-34-2	2	34VCT@75mA	17V@150mA
ETU-LP-34-6	6	34VCT@170mA	17V@340mA
ETU-LP-34-12	12	34VCT@350mA	17V@700mA
ETU-LP-34-24	24	34VCT@700mA	17V@1.4A
ETU-LP-34-48	48	34VCT@1.4A	17V@2.8A
ETU-LP-40-2	2	40VCT@60mA	20V@120mA
ETU-LP-40-6	6	40VCT@150mA	20V@300mA
ETU-LP-40-12	12	40VCT@300mA	20V@600mA
ETU-LP-40-24	24	40VCT@600mA	20V@1.2A
ETU-LP-40-48	48	40VCT@1.2A	20V@2.4A
ETU-LP-56-2	2	56VCT@45mA	28V@90mA
ETU-LP-56-6	6	56VCT@100mA	28V@200mA
ETU-LP-56-12	12	56VCT@210mA	28V@420mA
ETU-LP-56-24	24	56VCT@425mA	28V@850mA
ETU-LP-56-48	48	56VCT@850mA	28V@1.7A
ETU-LP-88-2	2	88VCT@28mA	44V@56mA
ETU-LP-88-6	6	88VCT@65mA	44V@130mA
ETU-LP-88-12	12	88VCT@135mA	44V@270mA
ETU-LP-120-2	2	120VCT@20mA	60V@40mA
ETU-LP-120-6	6	120VCT@50mA	60V@100mA
ETU-LP-120-12	12	120VCT@100mA	60V@200mA
ETU-LP-230-2	2	230VCT@10mA	115V@20mA
ETU-LP-230-6	6	230VCT@25mA	115V@50mA
ETU-LP-230-12	12	230VCT@50mA	115V@100mA

中策亿特电子有限公司 ZHONGCE E.T ELECTRONICS CO.,LTD.
TEL: 0086-574-88156789, FAX: 0086-574-88156799, www.zcet.cn

LINEAR WALL PLUG ADAPTERS 插墙式线性电源适配器

AC and DC Output Versions with Output Cord

型 号 Part No.	额定输出 Rated Output at 100% Load		Output Type (AC/DC)
	电压 Volts	电流 mA	
ETAD-0400260	4.0	260	DC
ETAA-0400260	4.0	260	AC
ETAD-0600500	6.0	500	DC
ETAA-0600500	6.0	500	AC
ETAD-1200200	12.0	200	DC
ETAA-1200200	12.0	200	AC
ETAD-1200300	12.0	300	DC
ETAA-1200300	12.0	300	AC
ETAD-1200400	12.0	400	DC
ETAA-1200400	12.0	400	AC
ETAD-1200500	12.0	500	DC
ETAA-1200500	12.0	500	AC

AC and DC Output Versions with CATV F Female Terminal

型 号 Part No.	额定输出 Rated Output at 100% Load		Output Type (AC/DC)
	电压 Volts	电流 mA	
ETAD-1200200D	12.0	200	DC
ETAD-1500200D	15.0	200	DC

特性 General Specification:

- 绝缘强度 Dielectric Strength—1500VRMS Hipot
- 初级 Primary—120V-50/60Hz
- 工作温度 Operating Temp—-10°C to +40°C
- Class II Transformer
- 产品已通过 UL 认证/ Products have UL Certification

符合标准Agency Standards

- UL, compliant to UL1310. File # E310452
- CUL, compliant to CSA 22.2 #223.

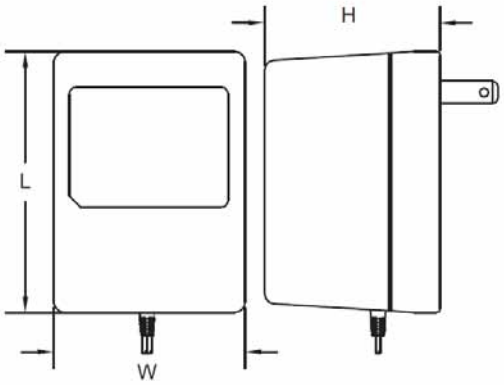

Mechanical Dimension Table/外形尺寸表

型 号 Part No.	LENGTH(L) MM	WIDTH(W) MM	HEIGH(H) MM
ETAD-0400260	57.0	44.0	38.0
ETAA-0400260	57.0	44.0	38.0
ETAD-0600500	66.0	51.0	44.0
ETAA-0600500	66.0	51.0	44.0
ETAD-1200200	57.0	44.0	38.0
ETAA-1200200	57.0	44.0	38.0
ETAD-1200300	66.0	51.0	44.0
ETAA-1200300	66.0	51.0	44.0
ETAD-1200400	66.0	51.0	44.0
ETAA-1200400	66.0	51.0	44.0
ETAD-1200500	66.0	51.0	44.0
ETAA-1200500	66.0	51.0	44.0
ETAD-1200200D	56.0	43.0	36.0
ETAD-1500200D	56.0	43.0	36.0

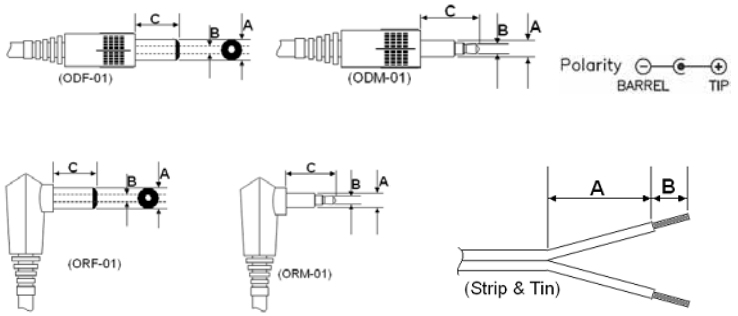

Output Plug Dimensions

PLUG TYPE	A (mm)	B (mm)	C (mm)	GENDER 种类
ODF-01	3.5/5.0/5.5	1.35/2.1/2.5	7.5~15.0	FEMALE
ODM-01	2.5/3.5	1.3	7.5~15.0	MALE
ORF-01	3.5/5.0/5.5	1.35/2.1/2.5	7.5~15.0	FEMALE
ORM-01	2.5/3.5	1.3	7.5~15.0	MALE
Strip &	30~200	5.0 ~ 20.0	-	-

S

接受客户定做/Custom versions available upon request

未经通知可以自行调整参数/All data are subject to modification without prior notice

中策亿特电子有限公司 ZHONGCE E.T ELECTRONICS CO.,LTD.

TEL: 0086-574-88156789, FAX: 0086-574-88156799, www.zcet.cn

R-CORE TRANSFORMERS　　R型变压器(ETR系列)

Low Frequency, Open-Style, Foot Mount, Power Transformer ETR Series

RoHS 2002/95/EC

主要规格/特点:

- 低噪音，有利于建立更好的工作环境
- 绝缘结构合理，符合安全标准
- 体积小，重量轻，便于安装
- 高效率，低损耗，适用于连续工作
- 标准化系列产品的额定功率由 10VA 到 1000VA
- 应用：医疗设备的 CT,超声机,心电图,听力检测设备,电子仪器,自动车床和特殊工业设备
- 绝缘等级—130 度 B 级
- 保护等级— IP00

机械结构 Mechanical

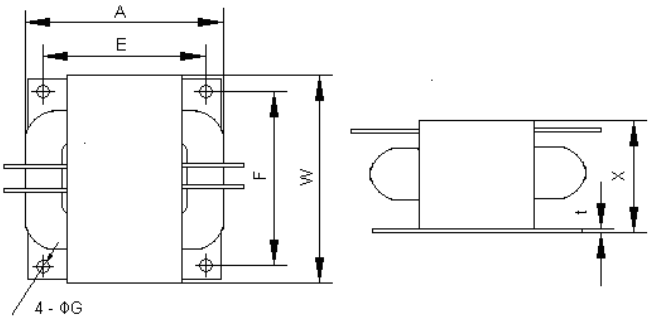

Key Specifications/Special Features:

- Less noise, in favor of building better environment of work
- Reasonable insulation structure, conformity to the safety standard
- Small size, light weight and convenient for mounting
- High efficiency, less unload loss and suitable for continuous work
- Standardized series of products with power rating from 10VA to 1000VA
- Applications: medical equipment CT, supersonic machine, electrocardiograph, hearing detecting machine, electronic instrument, automachine and special industrial equipment
- Insulation—Class B（130℃）
- Degree of protection—IP00

参考尺寸 Dimensions (mm)

型　号 Part No.	Power (VA)	基准尺寸 Reference dimension (mm)							Weight(Kg)
		A	W	X	E	F	G	t	
ETR-10	0-15	74	61	37	68	48	4	1.0	0.4
ETR-20	15-28	81	70	39	55	45	4	1.0	0.5
ETR-26	28-36	83	72	42	70	55	4	1.0	0.6
ETR-30	36-42	96	77	42	70	60	5	1.0	0.7
ETR-40	42-58	98	80	44	70	60	5	1.0	0.8
ETR-50	58-65	101	88	48	75	65	5	1.0	1.0
ETR-65	65-80	105	90	51	90	60	5	1.0	1.3
ETR-80	80-100	124	91	52	90	70	5	1.2	1.6
ETR-100	100-120	124	103	55	100	80	5	1.2	1.8
ETR-160	120-190	138	115	63	100	85	5	1.6	2.6
ETR-260	190-280	156	121	66	130	95	5	1.6	3.5
ETR-320	280-380	163	128	70	135	95	5	1.6	3.9
ETR-600	380-600	182	145	85	142	100	8	1.6	6.5
ETR-1000	600-1000	222	172	100	180	140	8	1.6	10.5

接受客户定做/Custom versions available upon request
未经通知可以自行调整参数/All data are subject to modification without prior notice

中策亿特电子有限公司 ZHONGCE E.T ELECTRONICS CO.,LTD.
TEL: 0086-574-88156789, FAX: 0086-574-88156799, www.zcet.cn

AC COMMON MODE CHOKE COILS　　AC共模线圈（T系列）

RoHS 2002/95/EC

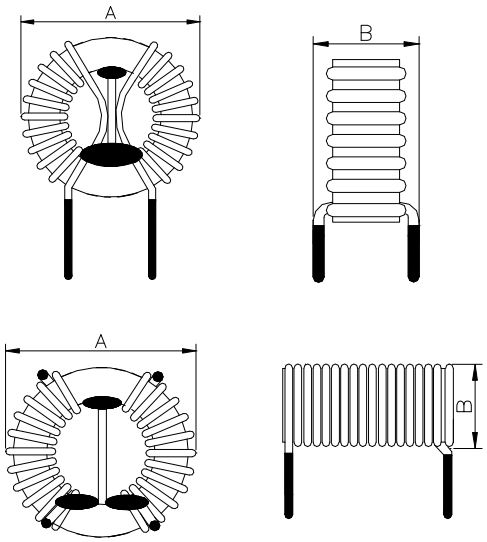

◆ 安装尺寸依客户定制。
Will make the mounting dimension according to your requirement .

特性 General Specification:

◆ 电感范围　Inductances Range:　0.5mH~40mH.

◆ 电感公差　Inductances Tolerance: ±30% at 40 KHz

◆ 额定电流　Rated Current(AC): 0.4A~25A

应用 Apply

◆ 广泛应用于录像机、彩色电视机、电源供给、功率放大、开/关电路中，以防止杂讯干扰。

These are common mode choke coils which are available for VCR, color television, power supply, power magnified , switching circuit to prevent noise.

型　号 Part No.	电感量 Inductances	额定电流 Rated Current(AC)
L-T8.0×4×3.5CV/H	0.5mH~5mH	1.0A~0.4A
L-T14×9×6CV/H	0.5mH~20mH	2.0A~0.4A
L-T16×12×8CV/H	0.5mH~20mH	2.0A~0.4A
L-T25×15×12CV/H	0.6mH~24mH	6.0A~0.6A
L-T31×19×13CV/H	0.8mH~32mH	12.0A~1.2A
L-T47×27×15CV/H	1.0mH~40mH	25.0A~2.0A

Mechanical Dimension Table/外形尺寸表

型　号 Part No.	A	B					
	DIMENSION(mm)						
L-T8.0×4×3.5CV/H	10.5	5.8					
L-T14×9×6CV/H	18.0	13.0					
L-T16×12×8CV/H	21.5	13.5					
L-T25×15×12CV/H	29.0	16.0					
L-T31×19×13CV/H	36.0	20.0					
L-T47×27×15CV/H	57.0	27.0					

中策亿特电子有限公司 ZHONGCE E.T ELECTRONICS CO.,LTD.
TEL: 0086-574-88156789, FAX: 0086-574-88156799, www.zcet.cn

AC COMMON MODE CHOKE COILS　　AC共模线圈（ET系列）

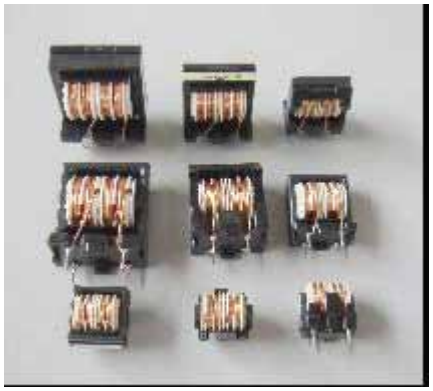

RoHS 2002/95/EC

V：

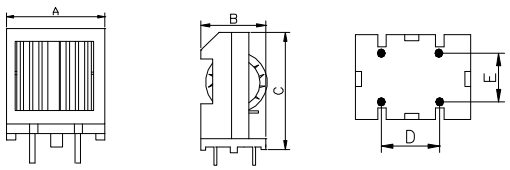

H：

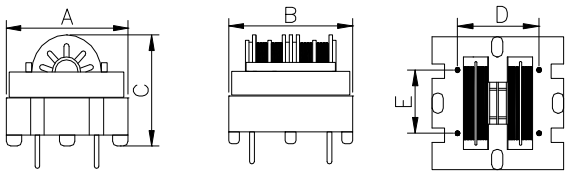

◆ 安装尺寸依客户定制。
Will make the mounting dimension according to your requirement .

特性 **General Specification:**

◆ 电感范围　Inductances Range:　1.8mH~100mH.

◆ 电感公差　Inductances Tolerance: ±30% at 40 KHz

◆ 额定电流　Rated Current(AC): 300mA~4.5A

应用 **Apply**

◆ 广泛应用于录像机、彩色电视机、电源供给、功率放大、开/关电路中，以防止杂讯干扰。

These are common mode choke coils which are available for VCR, color television, power supply, power magnified, switching circuit　to prevent noise.

型　号 Part No.	电感量 Inductances	额定电流 Rated Current(AC)
L-ET20-V	2.3mH~45mH	1.3A~300mA
L-ET24-V	3.0mH~50mH	1.4A~350mA
L-ET28-V	1.8mH~90mH	2.6A~600mA
L-ET35-V	4.0mH~100mH	4.5A~800mA
L-ET20-H	2.3mH~45mH	1.3A~300mA
L-ET24-H	3.0mH~50mH	1.4A~350mA
L-ET28-H	1.8mH~90mH	2.6A~600mA
L-ET35-H	4.0mH~100mH	4.5A~800mA

Mechanical Dimension Table/外形尺寸表

型　号 Part No.	A	B	C	D	E	PIN NUMBER	
	DIMENSION(mm)						
L-ET20-V	22.0	17.0	21.5	13.0	10.0	2+2	
L-ET24-V	25.5	18.5	30.0	13.0	10.0	2+2	
L-ET28-V	30.5	22.0	36.0	13.0	10.0	2+2	
L-ET35-V	37.0	25.5	43.5	21.0	15.0	2+2	
L-ET20-H	19.0	26.5	24.0	13.0	10.0	2+2	
L-ET24-H	26.0	26.0	21.0	21.0	15.0	2+2	
L-ET28-H	30.0	30.0	23.5	24.0	20.0	2+2	
L-ET35-H	37.0	37.0	29.0	30.0	25.0	2+2	

中策亿特电子有限公司 ZHONGCE E.T ELECTRONICS CO.,LTD.
TEL: 0086-574-88156789, FAX: 0086-574-88156799, www.zcet.cn

AC COMMON MODE CHOKE COILS　　AC共模线圈（UU系列）

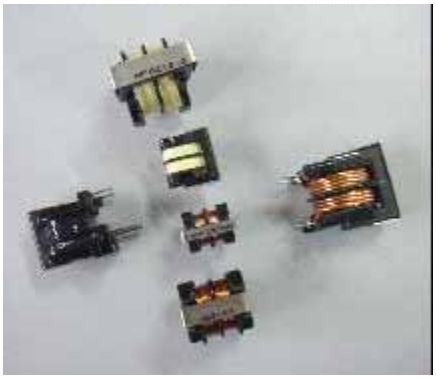

RoHS 2002/95/EC

V：

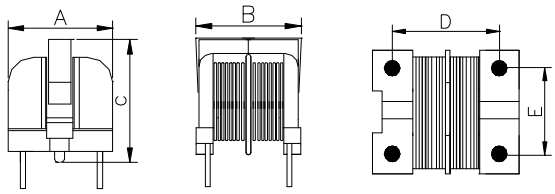

H：

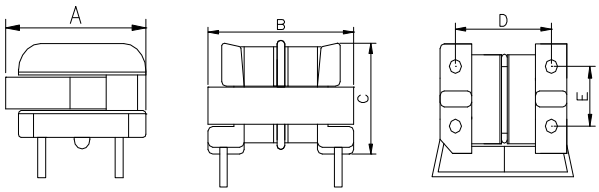

◆ 安装尺寸依客户定制。
Will make the mounting dimension according to your requirement .

特性 General Specification:

◆ 电感范围　Inductances Range:　470uH~80mH.

◆ 电感公差　Inductances Tolerance: ±30% at 40 KHz

◆ 额定电流　Rated Current(AC): 200mA~2.0A

应用 Apply

◆ 广泛应用于录像机、彩色电视机、电源供给、功率放大、开/关电路中，以防止杂讯干扰。
These are common mode choke coils which are available for VCR, color television, power supply, power magnified switching circuit to prevent noise.

型　号 Part No.	电感量 Inductances	额定电流 Rated Current(AC)
L-UU9.8-V	470uH~13mH	1.0A~200mA
L-UU10.5-V	3.3mH~80mH	650mA~150mA
L-UU15.7-V	1.5mH~80mH	2.0A~400mA
L-UU9.8-H	470uH~13mH	1.0A~200mA
L-UU10.5-H	3.3mH~80mH	650mA~150mA

Mechanical Dimension Table/外形尺寸表

型　号 Part No.	A	B	C	D	E	PIN NUMBER	
	DIMENSION(mm)						
L-UU9.8-V	11.0	16.0	17.0	8.0	7.0	2+2	
L-UU10.5-V	17.0	19.0	22.0	13.0	10.0	2+2	
L-UU15.7-V	18.5	23.5	28.0	13.0	10.0	2+2	
L-UU9.8-H	16.0	16.5	13.0	8.0	7.0	2+2	
L-UU10.5-H	19.0	18.5	17.0	13.0	10.0	2+2	

中策亿特电子有限公司 ZHONGCE E.T ELECTRONICS CO.,LTD.
TEL: 0086-574-88156789, FAX: 0086-574-88156799, www.zcet.cn

POWER LINE CHOKES 功率扼流圈(DR系列)

RoHS 2002/95/EC

特性 General Specification:

- ◆ 电感范围 Inductances Range: 1.0uH~100.0mH.
- ◆ 电感公差 Inductances Tolerance: ±10% at 40 KHz
- ◆ 饱和电流 Saturation Current: 40mA-40A (DC)

应用 Apply

- ◆ 广泛应用于电源供给、功率放大，开、关电路的滤波、整流和晶闸管控制电路，输出扼流圈。
  Widely used for power supply, power magnified switches circuit filter, rectifier and thyristor controlling circuit , the output choke.

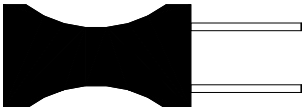

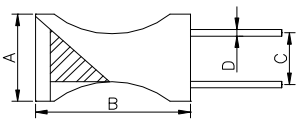

- ◆ 安装尺寸依客户定制。
  Will make the mounting dimension according to your requirement .

型 号 Part No.	电感量 Inductances at 0 DC	饱和电流 Saturation Current(DC)
L-DR6×8.3	1.0uH~10.0mH	3A~40mA
L-DR8×9	1.0uH~10.0mH	4A~40mA
L-DR8×10	1.0uH~10.0mH	4A~40mA
L-DR9×12	5.0uH~10.0mH	5A~50mA
L-DR10×12	10.0uH~10.0mH	6A~60mA
L-DR10×16	20.0uH~20.0mH	7A~70mA
L-DR12×14	30.0uH~30.0mH	10A~100mA
L-DR14×15	50.0uH~50.0mH	20A~200mA
L-DR16×18	100.0uH~100.0mH	40A~400mA

Mechanical Dimension Table/外形尺寸表

型 号 Part No.	A	B	C	D						
	DIMENSION(mm)									
L-DR6×8.3	7.0	9.3	3.0	Φ0.6						
L-DR8×9	9.0	10.0	4.0	Φ0.7						
L-DR8×10	9.0	11.0	4.0	Φ0.7						
L-DR9×12	10.0	13.0	5.0	Φ0.8						
L-DR10×12	11.0	13.0	5.0	Φ0.8						
L-DR10×16	11.0	16.0	5.0	Φ0.8						
L-DR12×14	13.0	14.0	5.0	Φ0.8						
L-DR14×15	15.0	16.0	6.0	Φ0.6						
L-DR16×18	17.0	19.0	10.0	Φ1.0						

中策亿特电子有限公司 ZHONGCE E.T ELECTRONICS CO.,LTD.
TEL: 0086-574-88156789, FAX: 0086-574-88156799, www.zcet.cn

POWER LINE CHOKES 功率扼流圈(R棒系列)

RoHS 2002/95/EC

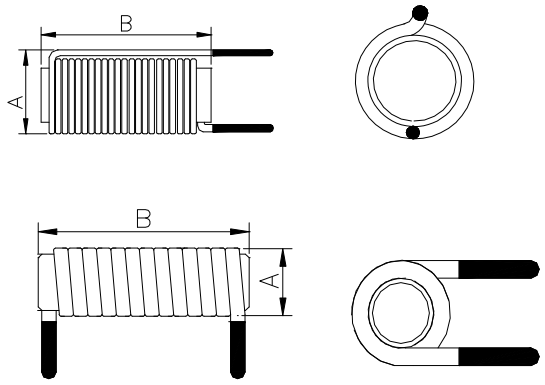

◆ 安装尺寸依客户定制。
Will make the mounting dimension according to your requirement .

特性 **General Specification:**

◆ 电感范围 Inductances Range: 1.0uH~1.0mH.

◆ 电感公差 Inductances Tolerance: ±6% at 40 KHz

◆ 饱和电流 Saturation Current: 300mA-40A (DC)

应用 **Apply**

◆ 广泛应用于电源供给、功率放大，开、关电路的滤波、整流和晶闸管控制电路，输出扼流圈。
Widely used for power supply, power magnified switches circuit filter, rectifier and thyristor controlling circuit, the output choke.

型 号 Part No.	电感量 Inductances at 0 DC	饱和电流 Saturation Current(DC)
L-R3×10	1.0uH~50uH	1.5A~300mA
L-R3×12	1.0uH~50uH	1.5A~300mA
L-R3×15	1.0uH~50uH	2.0A~300mA
L-R4×15	1.0uH~50uH	2.0A~500mA
L-R4×20	1.0uH~50uH	2.0A~500mA
L-R5×20	10.0uH~100uH	3.0A~500mA
L-R6×25	20.0uH~200uH	4.0A~600mA
L-R8×25	50.0uH~500uH	5.0A~600mA
L-R10×64	200.0uH~1000uH	40A~10A

Mechanical Dimension Table/外形尺寸表

型 号 Part No.	A	B								
	DIMENSION(mm)									
L-R3×10	5.0	10.5								
L-R3×12	5.0	12.5								
L-R3×15	5.0	15.5								
L-R4×15	7.0	16.0								
L-R4×20	8.0	21.5								
L-R5×20	9.0	21.5								
L-R6×25	10.0	26.5								
L-R8×25	16.0	26.0								
L-R10×64	24.5	65.5								

中策亿特电子有限公司 ZHONGCE E.T ELECTRONICS CO.,LTD.
TEL: 0086-574-88156789, FAX: 0086-574-88156799, www.zcet.cn

POWER LINE CHOKES 功率扼流圈(T系列)

RoHS 2002/95/EC

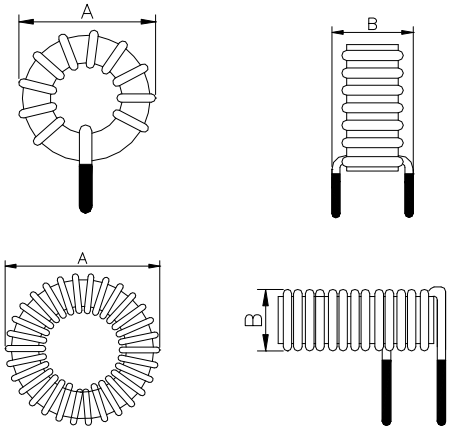

◆ 安装尺寸依客户定制。
Will make the mounting dimension according to your requirement .

特性 General Specification:

◆ 电感范围 Inductances Range: 0.1uH~26.0mH.

◆ 电感公差 Inductances Tolerance: ±8% at 40 KHz

◆ 饱和电流 Saturation Current: 30A-1.0A (DC)

应用 Apply

◆ 广泛用于电视和音响设备，不间断电源，家用电器、滤波器、电子镇流器、节能灯等。
Widely used for the color television and stereo equipment, uninterrupted power supply, electric appliances, filter, electronic ballast, energy-saving and so on.

型 号 Part No.	电感量 Inductances at 0 DC	饱和电流 Saturation Current(DC)
L-T44V/H	0.1uH~60uH	30A~1A
L-T50V/H	0.2uH~94uH	30A~1A
L-T60V/H	0.4uH~120uH	30A~1A
L-T68V/H	0.8uH~250uH	30A~1A
L-T80V/H	2.0uH~400uH	30A~1A
L-T90V/H	3.7uH~680uH	30A~1A
L-T94V/H	3.0uH~500uH	30A~1A
L-T106V/H	5.8uH~1080uH	30A~1A
L-T130V/H	8.0uH~1500uH	30A~1A
L-T157V/H	21.5uH~3320uH	30A~1A
L-T184V/H	34.0uH~5400uH	30A~1A
L-T250V/H	102uH~14800uH	30A~1A
L-T400V/H	190uH~26100uH	30A~1A

Mechanical Dimension Table/外形尺寸表

型 号 Part No.	A	B		
	DIMENSION(mm)			
L-T44V/H	15.0	7.5		
L-T50V/H	16.5	8.0		
L-T60V/H	19.5	10.0		
L-T68V/H	23.5	12.0		
L-T80V/H	25.5	13.0		
L-T90V/H	31.0	17.0		
L-T94V/H	32.0	15.0		
L-T106V/H	34.0	16.5		
L-T130V/H	39.5	19.0		
L-T157V/H	49.5	21.5		
L-T184V/H	56.0	26.0		
L-T250V/H	75.0	34.0		
L-T400V/H	130.0	43.0		

中策亿特电子有限公司 ZHONGCE E.T ELECTRONICS CO.,LTD.
TEL: 0086-574-88156789, FAX: 0086-574-88156799, www.zcet.cn

SWITCHING POWER TRANSFORMER 开关电源变压器（T型系列）

RoHS 2002/95/EC

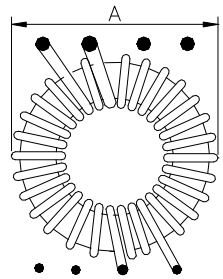

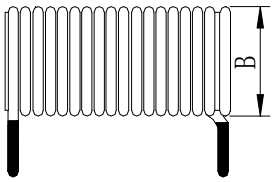

◆ 安装尺寸依客户定制。
Will make the mounting dimension according to your requirement .

特性 General Specification:

◆ 功率 Power : 100W~1600W

◆ 绝缘强度 Dielectric Strength: 1250/2500/3750VRMS Hipot

◆ 绝缘系统 Insulation systems: CLASS B (130℃)

◆ 阻燃等级 Flammability Rating: UL94-VO

应用 Apply

◆ 广泛应用于电子仪器设备、程控交换机、照明设备、汽车功放、数字音响等。

Widely used for electronic instruments, SPC exchange, lighting equipment, car amplifier, digital audio and so on.

型 号 Part No.	输出功率 Reference Power	工作频率 Working Frequency
T-T29*19*15	100W~400W	50KHZ~200KHZ
T-T36*23*15	150W~600W	50KHZ~200KHZ
T-T38*19*13	200W~800W	50KHZ~200KHZ
T-T47*27*15	400W~1600W	50KHZ~200KHZ

Mechanical Dimension Table/外形尺寸表

型 号 Part No.	A	B			PIN NUMBER	
	DIMENSION(mm)					
T-T29*19*15	Φ36. 0	22.5				
T-T36*23*15	Φ45.0	26.5				
T-T38*19*13	Φ49.0	22.5				
T-T47*27*15	Φ57.0	27.0				

中策亿特电子有限公司 ZHONGCE E.T ELECTRONICS CO.,LTD.
TEL: 0086-574-88156789, FAX: 0086-574-88156799, www.zcet.cn

SWITCHING POWER TRANSFORMER 开关电源变压器（EC型系列）

RoHS 2002/95/EC

V：

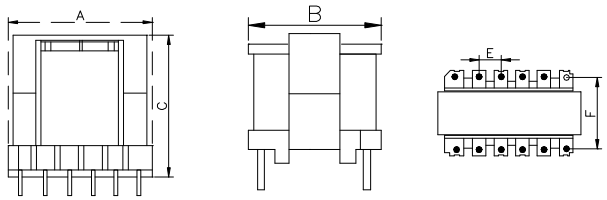

H：

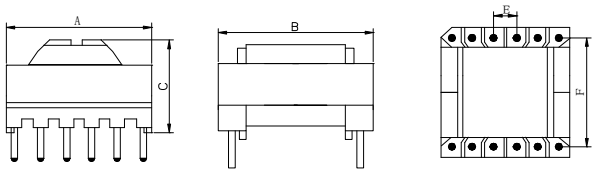

◆ 安装尺寸依客户定制。
Will make the mounting dimension according to your requirement .

特性 General Specification:

◆ 功率 Power : 40W~350W

◆ 绝缘强度 Dielectric Strength: 3750VRMS Hipot

◆ 绝缘系统 Insulation systems: CLASS B (130℃)

◆ 阻燃等级 Flammability Rating: UL94-VO

应用 Apply

◆ 广泛应用于手提电话充电器、计算机电源、电子仪器设备、程控交换机、彩电、照明设备等。
Widely used for mobile chargers, PC power, electronic instruments, SPC exchange, color television, lighting equipment and so on.

型 号 Part No.	输出功率 Reference Power	工作频率 Working Frequency
T-EC2828-V/H	40W~100W	50KHZ~100KHZ
T-EC2834-V/H	60W~120W	50KHZ~100KHZ
T-EC35-V/H	90W~150W	50KHZ~100KHZ
T-EC39-V	120W~200W	50KHZ~100KHZ
T-EC40-H	120W~200W	50KHZ~100KHZ
T-EC42-H	150W~260W	50KHZ~100KHZ
T-EC4220-V	200W~350W	50KHZ~100KHZ

Mechanical Dimension Table/外形尺寸表

型 号 Part No.	A	B	C	D	E	PIN NUMBER	
	DIMENSION(mm)						
T-EC2828-V	30.5	23.5	30.5	5.0	17.5	6+6	
T-EC2828-H	30.0	30.5	23.5	5.0	25.0	6+6	
T-EC2834-V	31.0	27.5	39.5	5.0	17.5	6+6	
T-EC2834-H	31.0	36.0	25.0	5.0	30.0	6+6	
T-EC35-V	36.5	29.0	44.5	5.0	22.5	7+7	
T-EC35-H	37.0	42.5	29.0	5.0	34.0	7+7	
T-EC39-V	42.0	33.0	53.0	5.0	25.0	7+7	
T-EC40-H	42.0	47.5	32.0	5.0	35.0	8+8	
T-EC4215-V	44.0	33.5	49.0	5.0	25.0	7+7	
T-EC4220-V	44.0	46.0	36.0	5.0	35.0	8+8	

中策亿特电子有限公司 ZHONGCE E.T ELECTRONICS CO.,LTD.
TEL: 0086-574-88156789, FAX: 0086-574-88156799, www.zcet.cn

SWITCHING POWER TRANSFORMER 开关电源变压器（EE型系列）

RoHS 2002/95/EC

特性 General Specification:

- 功率 Power : 2W~30W
- 绝缘强度 Dielectric Strength: 1250/2500/3750VRMS Hipot
- 绝缘系统 Insulation systems: CLASS B (130℃)
- 阻燃等级 Flammability Rating: UL94-VO

V：

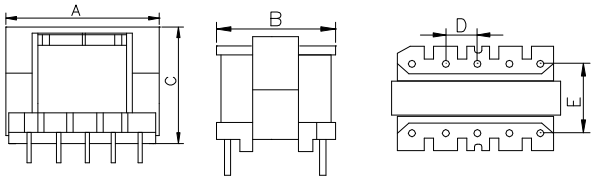

H：

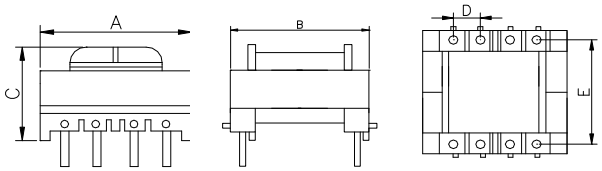

- 安装尺寸依客户定制。
  Will make the mounting dimension according to your requirement .

应用 Apply

- 广泛应用于手提电话充电器、计算机电源、电子仪器设备、程控交换机、彩电、照明设备等。
  Widely used for mobile chargers, PC power, electronic instruments, SPC exchange, color television, lighting equipment and so on.

型 号 Part No.	输出功率 Reference Power	工作频率 Working Frequency
T-EE10-V	2W~5W	50KHZ~100KHZ
T-EE13-V/H	3W~6W	50KHZ~100KHZ
T-EE16-V/H	4W~7W	50KHZ~100KHZ
T-EE19-V/H	5W~9W	50KHZ~100KHZ
T-EE20-H	8W-18W	50KHZ~100KHZ
T-EE22-V	8W~18W	50KHZ~100KHZ
T-EE25-V	18W~30W	50KHZ~100KHZ

Mechanical Dimension Table/外形尺寸表

型 号 Part No.	A	B	C	D	E	PIN NUMBER	
	DIMENSION(mm)						
T-EE10-V	11.0	11.0	12.0	2.5	8.0	4+4	
T-EE13-V	14.5	13.0	14.5	2.5	8.5	5+5	
T-EE13-H	14.5	14.5	13.5	2.5	10.0	3+3	
T-EE16-V	17.5	13.5	16.0	3.0	9.0	3+3	
T-EE16-H	17.5	16.0	15.0	3.0	11.0	4+4	
T-EE19-V	21.0	16.0	18.0	4.0	11.0	4+4	
T-EE19-H	21.0	18.0	15.0	3.8/5.0	12.6	4+4	
T-EE20-H	22.0	22.0	17.0	5.0	15.0	4+4	
T-EE22-V	23.5	16.5	21.5	4.0	10.2	5+5	
T-EE25-V	27.0	22.0	24.0	5.0	15.0	5+5	

中策亿特电子有限公司 ZHONGCE E.T ELECTRONICS CO.,LTD.
TEL: 0086-574-88156789, FAX: 0086-574-88156799, www.zcet.cn

SWITCHING POWER TRANSFORMER 开关电源变压器（EE型系列）

RoHS 2002/95/EC

V：

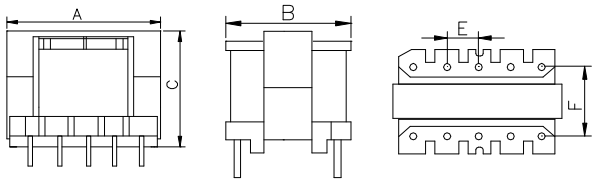

H：

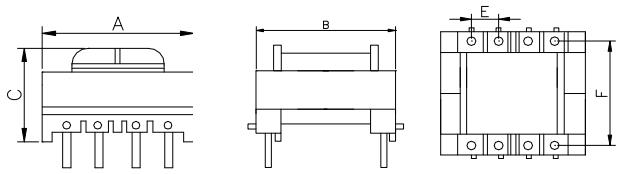

◆ 安装尺寸依客户定制。
Will make the mounting dimension according to your requirement .

特性 **General Specification:**

◆ 功率 Power : 24W~2000W

◆ 绝缘强度 Dielectric Strength: 3750VRMS Hipot

◆ 绝缘系统 Insulation systems: CLASS B (130℃)

◆ 阻燃等级 Flammability Rating: UL94-VO

应用 **Apply**

◆ 广泛应用于手提电话充电器、计算机电源、电子仪器设备、程控交换机、彩电、照明设备等。
Widely used for mobile chargers, PC power, electronic instruments, SPC exchange, color television, lighting equipment and so on.

型 号 Part No.	输出功率 Reference Power	工作频率 Working Frequency
T-EE28-V	24W~50W	50KHZ~100KHZ
T-EE30-V	36W~72W	50KHZ~100KHZ
T-EE33-V	48W~90W	50KHZ~100KHZ
T-EE40-V/H	60W~150W	50KHZ~100KHZ
T-EE42-V/H	150W~300W	50KHZ~100KHZ
T-EE55-V/H	500W~1000W	50KHZ~100KHZ
T-EE70-V	1000W~2000W	50KHZ~100KHZ

Mechanical Dimension Table/外形尺寸表

型 号 Part No.	A	B	C	D	E	PIN NUMBER	
	DIMENSION(mm)						
T-EE28-V	30.0	24.0	25.0	5.0	17.5	5+5	
T-EE30-V	32.0	23.0	29.0	5.0	17.5	5+5	
T-EE33-V	35.0	31.0	32.0	5.0	22.5	6+6	
T-EE40-V	42.0	30.0	37.0	5.0	22.5	6+6	
T-EE40-H	42.0	37.0	32.0	5.0	25.4	7+7	
T-EE42-V	44.0	42.0	45.5	5.0	33.0	6+6	
T-EE42-H	44.0	44.0	35.0	5.0	35.0	8+8	
T-EE55-V	62.0	50.0	62.0	5.0	30.0	10+10	
T-EE55-H	59.0	59.0	52.0	5.0	45.0	10+10	
T-EE70-V	115.0	61.0	83.0				

中策亿特电子有限公司 ZHONGCE E.T ELECTRONICS CO.,LTD.
TEL: 0086-574-88156789, FAX: 0086-574-88156799, www.zcet.cn

SWITCHING POWER TRANSFORMER 开关电源变压器（ETD型系列）

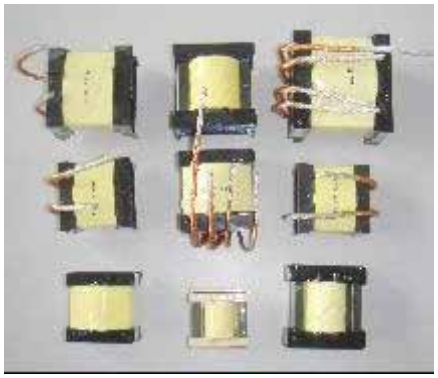

RoHS 2002/95/EC

V：

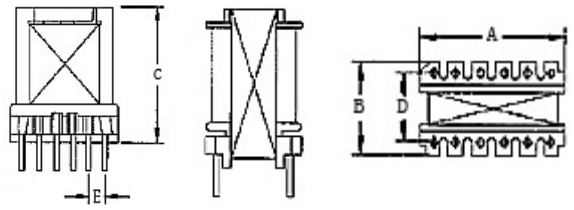

H：

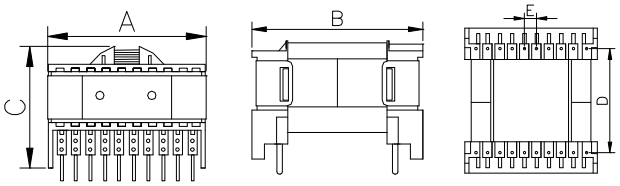

◆ 安装尺寸依客户定制。
Will make the mounting dimension according to your requirement .

特性 General Specification:

◆ 功率 Power : 50W~1250W

◆ 绝缘强度 Dielectric Strength: 3750VRMS Hipot

◆ 绝缘系统 Insulation systems: CLASS B (130℃)

◆ 阻燃等级 Flammability Rating: UL94-VO

应用 Apply

◆ 广泛应用于手提电话充电器、计算机电源、电子仪器设备、程控交换机、彩电、照明设备等。
Widely used for mobile chargers, PC power, electronic instruments, SPC exchange, color television, lighting equipment and so on.

型 号 Part No.	输出功率 Reference Power	工作频率 Working Frequency
T-ETD29V	50W~100W	50KHZ~100KHZ
T-ETD34H	70W~120W	50KHZ~100KHZ
T-ETD39H	100W~180W	50KHZ~100KHZ
T-ETD44H	200W~300W	50KHZ~100KHZ
T-ETD49H	300W~500W	50KHZ~100KHZ
T-ETD59H	800W~1250W	50KHZ~100KHZ

Mechanical Dimension Table/外形尺寸表

型 号 Part No.	A	B	C	D	E	PIN NUMBER	
	DIMENSION(mm)						
T-ETD29V	34.0	25.0	37.0	20.0	5.0	6+6	
T-ETD34H	40.0	42.5	33.6	26.2	5.0	7+7	
T-ETD39H	43.0	45.0	39.5	30.5	5.0	8+8	
T-ETD44H	49.5	51.5	42.0	35.8	5.0	8+8	
T-ETD49H	55.0	58.0	44.0	40.7	5.0	10+10	
T-ETD59H	66.0	67.5	50.0	50.8	5.0	10+10	

中策亿特电子有限公司 ZHONGCE E.T ELECTRONICS CO.,LTD.
TEL: 0086-574-88156789, FAX: 0086-574-88156799, www.zcet.cn

SWITCHING POWER TRANSFORMER 开关电源变压器（PQ型系列）

RoHS 2002/95/EC

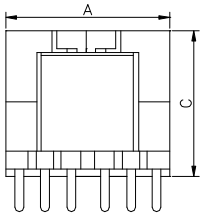

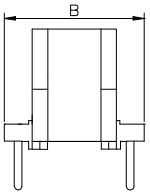

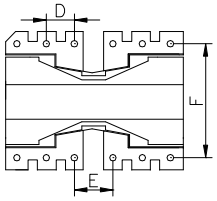

◆ 安装尺寸依客户定制。
Will make the mounting dimension according to your requirement .

特性 General Specification:

◆ 功率 Power : 18W~300W

◆ 绝缘强度 Dielectric Strength: 3750VRMS Hipot

◆ 绝缘系统 Insulation systems: CLASS B (130℃)

◆ 阻燃等级 Flammability Rating: UL94-VO

应用 Apply

◆ 广泛应用于手提电话充电器、计算机电源、电子仪器设备、程控交换机、彩电、照明设备等。
Widely used for mobile chargers, PC power, electronic instruments, SPC exchange, color television, lighting equipment and so on.

型 号 Part No.	输出功率 Reference Power	工作频率 Working Frequency
T-PQ2016	18W~36W	50KHZ~100KHZ
T-PQ2020	20W~48W	50KHZ~100KHZ
T-PQ2620	30W~60W	50KHZ~100KHZ
T-PQ2622.5	36W~90W	50KHZ~100KHZ
T-PQ2625	40W~100W	50KHZ~100KHZ
T-PQ3220	60W~120W	50KHZ~100KHZ
T-PQ3225	70W~150W	50KHZ~100KHZ
T-PQ3230	90W~180W	50KHZ~100KHZ
T-PQ3535	150W~300W	50KHZ~100KHZ

Mechanical Dimension Table/外形尺寸表

型 号 Part No.	A	B	C	D	E	F	
	DIMENSION(mm)						
T-PQ2016	23.0	23.0	18.3	2.5/3.8	5.0	20.3	
T-PQ2020	23.0	23.0	22.3	2.5/3.8	5.0	20.3	
T-PQ2620	26.5	29.3	21.5	3.8	7.5	25.4	
T-PQ2622.5	26.5	29.3	25.0	3.8	7.5	25.4	
T-PQ2625	26.5	29.3	29.1	3.8	7.5	25.4	
T-PQ3220	33.0	34.0	22.5	5.0	7.5	30.0/30.5	
T-PQ3225	33.0	34.0	28.5	5.0	7.5	30.0/30.5	
T-PQ3230	33.0	34.0	32.1	5.0	7.5	30.0/30.5	
T-PQ3535	36.0	39.0	37.4	5.0	10.1	35.5	

中策亿特电子有限公司 ZHONGCE E.T ELECTRONICS CO.,LTD.
TEL: 0086-574-88156789, FAX: 0086-574-88156799, www.zcet.cn

COMMUNICATIONS TRANSFORMER 通讯变压器（EFD系列）

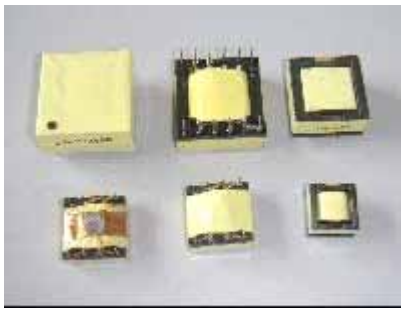

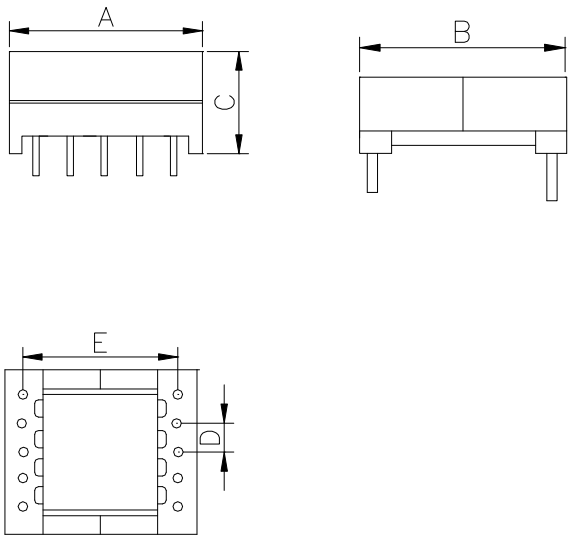

◆ 安装尺寸依客户定制。
Will make the mounting dimension according to your requirement .

特性 General Specification:

- ◆ 绝缘强度 Dielectric Strength: 3000VRMS Hipot
- ◆ 绝缘系统 Insulation systems: CLASS B (130℃)
- ◆ 阻燃等级 Flammability Rating: UL94-VO
- ◆ 漏磁小 Low Magnetic Leakage
- ◆ 衰耗低 Low Loss
- ◆ 分布电容小 Low Distributed Capacity
- ◆ 宽工作频率 Wide range of work frequency: 50KHz~500KHz

应用 Apply

◆ 广泛应用于传真机、数据传输、ADSL、HDSL、电话互通、数字通讯设备等

Widely used for fax machine, data transmission, ADSL, HDSL, telephone interconnect, digital telecommunication and so on.

Mechanical Dimension Table/外形尺寸表

型 号 Part No.	A	B	C	D	E	PIN NUMBER	
	DIMENSION(mm)						
T-EFD15	15.5	17.0	8.6	3.75	13.8	4+4	
T-EFD20	20.0	20.5	10.0	5.0	17.5	4+4	
T-EFD25	25.0	26.5	12.5	5.0	22.5	5+5	
T-EFD30	31.0	31.5	13.0	5.0	27.5	6+6	

中策亿特电子有限公司 ZHONGCE E.T ELECTRONICS CO.,LTD.
TEL: 0086-574-88156789, FAX: 0086-574-88156799, www.zcet.cn

COMMUNICATIONS TRANSFORMER 通讯变压器（POT系列）

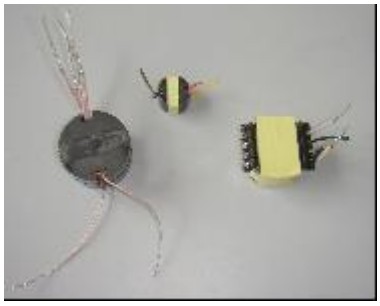

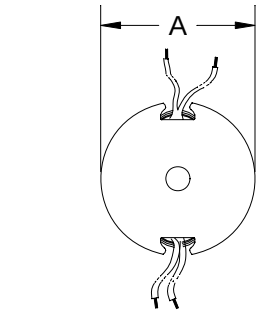

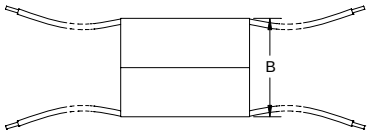

◆ 安装尺寸依客户定制。
Will make the mounting dimension according to your requirement .

特性 General Specification:

◆ 绝缘强度 Dielectric Strength: 1250/2500VRMS Hipot

◆ 绝缘系统 Insulation systems: CLASS B (130℃)

◆ 阻燃等级 Flammability Rating: UL94-VO

◆ 漏磁小 Low Magnetic Leakage

◆ 衰耗低 Low Loss

◆ 分布电容小 Low Distributed Capacity

◆ 宽工作频率 Wide range of work frequency: 50KHz~500KHz

应用 Apply

◆ 广泛应用于传真机、数据传输、ADSL、HDSL、电话互通、数字通讯设备等

Widely used for fax machine, data transmission, ADSL, HDSL, telephone interconnect, digital telecommunication and so on.

Mechanical Dimension Table/外形尺寸表

型 号 Part No.	A	B		
	DIMENSION(mm)			
T-POT9/5	Φ10.5	6.5		
T-POT11/7	Φ12.0	12.6		
T-POT18/11	Φ19.5	16.7		
T-POT26/16	Φ26.5	22.3		
T-POT30/19	Φ32.0	23.0		
T-POT36/22	Φ38.0	27.5		

中策亿特电子有限公司 ZHONGCE E.T ELECTRONICS CO.,LTD.
TEL: 0086-574-88156789, FAX: 0086-574-88156799, www.zcet.cn

COMMUNICATIONS TRANSFORMER 通讯变压器（RM系列）

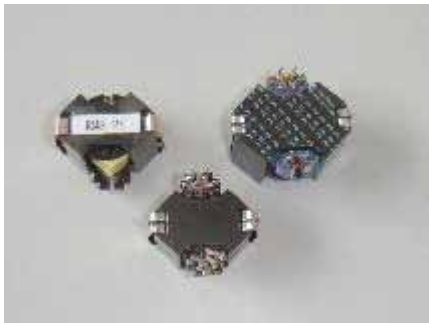

RoHS 2002/95/EC

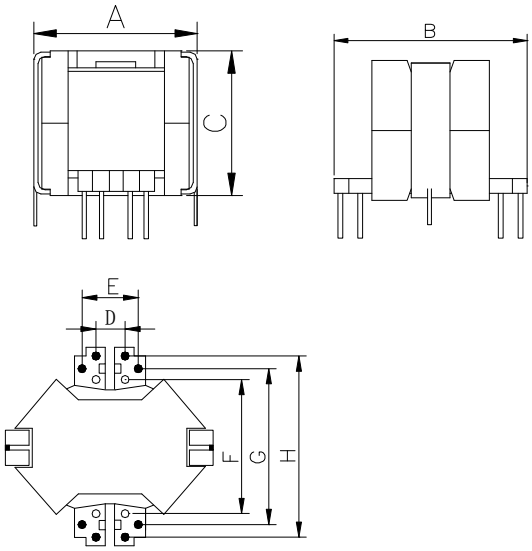

◆ 安装尺寸依客户定制。
Will make the mounting dimension according to your requirement .

特性 General Specification:

- ◆ 绝缘强度 Dielectric Strength: 1250/2500VRMS Hipot
- ◆ 绝缘系统 Insulation systems: CLASS B (130℃)
- ◆ 阻燃等级 Flammability Rating: UL94-VO
- ◆ 漏磁小 Low Magnetic Leakage
- ◆ 衰耗低 Low Loss
- ◆ 分布电容小 Low Distributed Capacity
- ◆ 宽工作频率 Wide range of work frequency：50KHz~500KHz

应用 Apply

◆ 广泛应用于传真机、数据传输、ADSL、HDSL、电话互通、数字通讯设备等

Widely used for fax machine, data transmission, ADSL, HDSL, telephone interconnect, digital telecommunication and so on.

Mechanical Dimension Table/外形尺寸表

型 号 Part No.	A	B	C	D	E	F	G	H	PIN NUMBER	
	DIMENSION(mm)									
T-RM4	13.5	13.5	9.5	1.8	3.6	7.2	10.8		3+3	
T-RM5	17.0	17.5	11.0	1.8	3.6	10.8	14.4		3+3	
T-RM6	20.0	21.0	13.5	1.8	3.6	0.8	14.4	18.0	4+4	
T-RM8	26.0	25.0	17.0	3.5	7.3	14.4	18.0	21.6	6+6	
T-RM10	32.0	28.5	20.0	3.6	7.2	18.0	21.6	25.2	6+6	
T-RM12	40.0	39.0	26.5	3.6	10.6	21.6	28.8	36.0	6+6	
T-RM14	44.5	43.5	31.5	7.2	14.3	25.2	32.4	39.5	6+6	

中策亿特电子有限公司 ZHONGCE E.T ELECTRONICS CO.,LTD.
TEL: 0086-574-88156789, FAX: 0086-574-88156799, www.zcet.cn

SMD SWITCHING POWER TRANSFORMER 贴片开关电源变压器(EE、ER型)

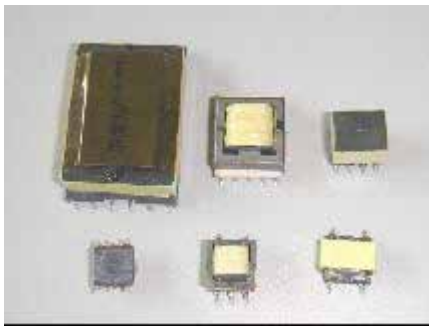

RoHS 2002/95/EC

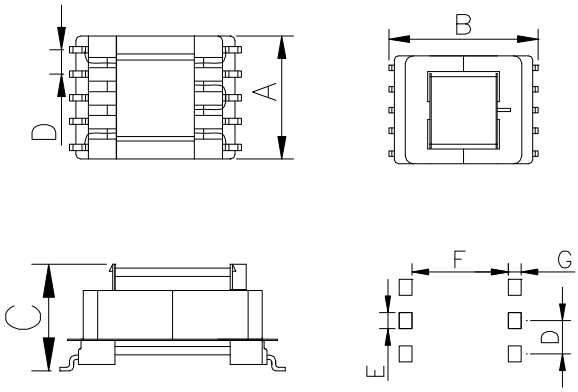

◆ 安装尺寸依客户定制。
Will make the mounting dimension according to your requirement .

特性 General Specification:

◆ 绝缘强度 Dielectric Strength: 1250/2500VRMS Hipot

◆ 绝缘系统 Insulation systems: CLASS B (130℃)

◆ 阻燃等级 Flammability Rating: UL94-VO

◆ 体积小 Small Size

◆ 易于装配，可编带包装，适合自动贴装

Surface-mountable, Tape Reel, Suitable for automatic operation.

◆ 宽工作频率 Wide range of work frequency: 50KHz~200KHz

应用 Apply

◆ 广泛应用于通讯产品、便携式电子设备、小功率开关电源等。
Widely used for telecommunications, portable electronics, low power of switch power supply and so on.

Mechanical Dimension Table/外形尺寸表

型 号 Part No.	A	B	C	D	E	F	G	PIN NUMBER
	DIMENSION(mm)							
T-EE5.0	5.5	8.0	4.8	1.85	0.5	6.8	0.5	3+3
T-EE6.3	6.7	9.0	5.2	2.54	0.6	7.3	0.5	3+3
T-EE8.3	8.8	13.2	8.8	2.5	0.7	10.8	1.0	3+3
T-EE12.5	13.8	18.3	8.9	2.5	0.6	15.3	1.2	5+5
T-ER9.5	10.0	13.1	5.8	2.0	0.7	10.1	0.8	4+4
T-ER11.5	12.7	12.8	6.35	2.0	0.7	11.0	0.6	5+5
T-ER14.5	16.5	17.0	8.0	2.5	0.7	14.6	0.7	5+5

中策亿特电子有限公司 ZHONGCE E.T ELECTRONICS CO.,LTD.
TEL: 0086-574-88156789, FAX: 0086-574-88156799, www.zcet.cn

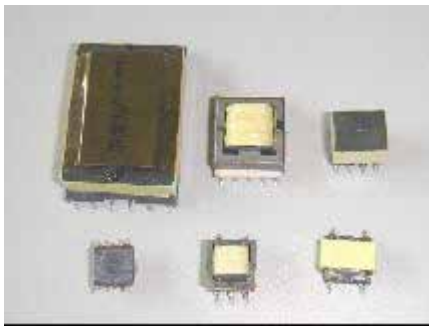

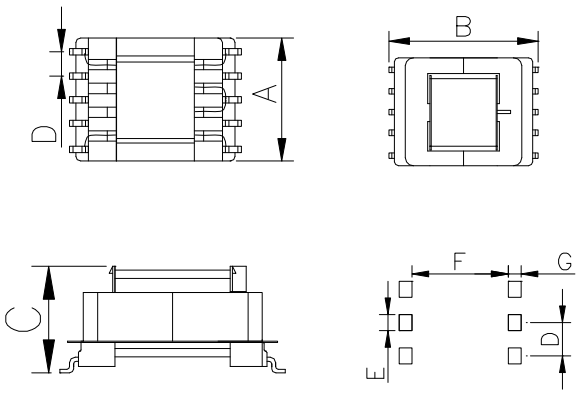

◆ 安装尺寸依客户定制。
Will make the mounting dimension according to your requirement .

特性 General Specification:

- ◆ 绝缘强度 Dielectric Strength: 1250/2500VRMS Hipot
- ◆ 绝缘系统 Insulation systems: CLASS B (130℃)
- ◆ 阻燃等级 Flammability Rating: UL94-VO
- ◆ 漏磁小 Low Magnetic Leakage
- ◆ 衰耗低 Low Loss
- ◆ 分布电容小 Low Distributed Capacity
- ◆ 宽工作频率 Wide range of work frequency:50KHz-200KHz
- ◆ 易于装配，可编带包装，适合自动贴装

Surface-mountable, Tape Reel, Suitable for automatic operation

应用 Apply

◆ 广泛应用于通讯产品、便携式电子设备、小功率开关电源等。
Widely used for telecommunications, portable electronics, low power of switch power supply and so on.

Mechanical Dimension Table/外形尺寸表

型 号 Part No.	A	B	C	D	E	F	G	PIN NUMBER
	DIMENSION(mm)							
T-EPC10	11.0	12.0	5.0	2.0	0.5	10.2	0.8	4+4
T-EPC13	16.0	20.0	8.0	2.5	0.7	17.2	1.2	5+5
T-EPC19	20.0	25.0	10.5	2.5	0.6	21.6	1.7	6+6
T-EP7	12.0	15.5	10.0	2.5	0.7	12.2	0.7	3+3
T-EP10	14.0	16.0	12.0	2.5	0.6	12.5	1.0	4+4
T-EP13	14.5	19.0	13.5	2.5	0.7	15.4	0.8	5+5
T-EFD15	17.0	24.0	9.0	2.5	0.7	18.2	2.0	5+5
T-EFD20	21.0	28.8	11.0	2.9	0.8	20.0	2.8	6+6

THREE PHASE TRANSFORMERS 叠片式三相变压器

Custom Designs Meet Your Requirements
根据客户要求定制

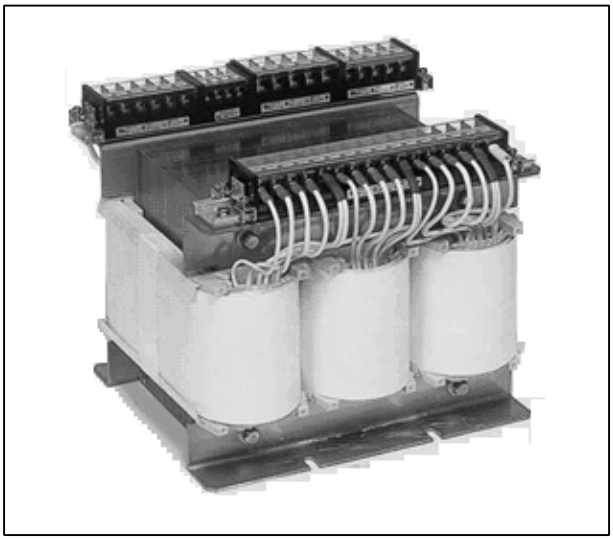

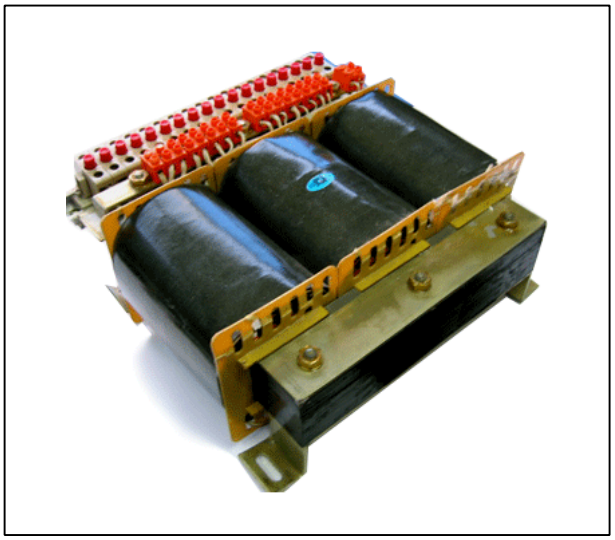

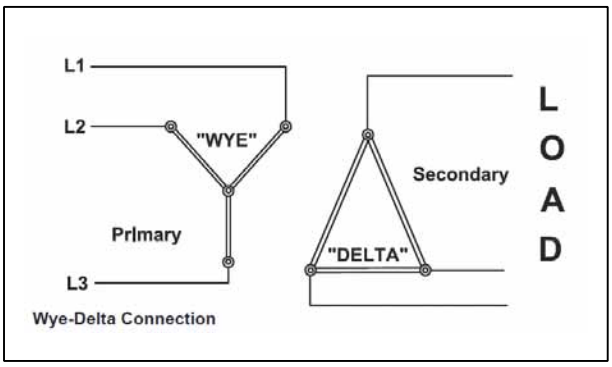

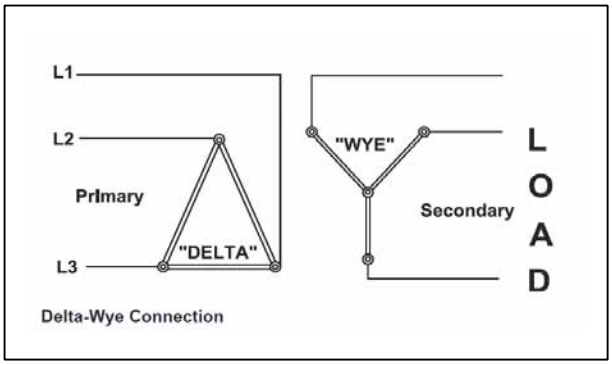

Capabilities

From small 100VA devices to large 45KVA designs, we tailor these transformers to your specific needs. Our Three Phase transformers are designed to cover a frequency range of 50 to 400Hz, can be shielded or unshielded, and are suitable for a wide variety of applications from medical equipment to avionics systems.

Configurations

Transformers can be supplied prewired for D(Delta) or Y(Wye) configurations for your specific installation requirements. Transformers are available with multiple taps, fuses, thermal cut-off, and multiple hardware.

Materials

ZCET's Three Phase Transformers are constructed with copper windings and grain-oriented silicon core materials assuring extremely high efficiency and the lowest loss possible. We manufacture using only the highest grade electrical insulation materials in order to meet the most demanding isolating applications and temperature requirements.

性能

功率容量从100VA到45KVA, 我们根据你们的特殊要求来定制这些变压器,我们的三相变压器覆盖的频率范围从50Hz到400Hz,可做屏蔽或不屏蔽的,适合各种医疗设备, 航空电子系统.

结构

变压器可以根据你们的要求连接成三角形或Y型,可以有多少抽头,安装保险丝,温控工关及多种硬件.

材料

中策亿特的三相变压器采用铜和取向硅钢片作为材料,保证了高效率和低损耗,我们仅使用最高等级的绝缘材料以满足大多数绝缘应用和温度要求

中策亿特电子有限公司 ZHONGCE E.T ELECTRONICS CO.,LTD.
TEL: 0086-574-88156789, FAX: 0086-574-88156799, www.zcet.cn